Draft. To be submitted to *Review of Scientific Instruments*, July 2002.

Progress toward a practical magnetic field diagnostic for low-field fusion plasmas based on dual mode correlation reflectometry

M. Gilmore[†], W.A. Peebles, S. Kubota, and X.V. Nguyen
Electrical Engineering Department, University of California, Los Angeles, CA 90095, USA
A. Ejiri
Graduate School of Frontier Sciences, University of Tokyo, Tokyo 113-0033, Japan

Previously, the proof of principle of measurement of magnetic field strength, $|\underline{B}|$, internal to a plasma by cross-correlation of ordinary (O) and extraordinary (X) mode fluctuation reflectometer signals has been demonstrated in a linear plasma device. It was found that dual mode (O-X) reflectometry data could be interpreted by a one dimensional (1D) numerical model to determine $|\underline{B}|$ in the vicinity of the reflectometer cutoff positions. Radial correlation properties of turbulence are also measured simultaneously with $|\underline{B}|$. This technique is potentially well suited to measurement of $|\underline{B}|$ in low-field fusion devices (e.g. B < 0.6 T) where standard magnetic field diagnostics are expected to be difficult to implement. However, transfer of this method to toroidal magnetic fusion devices presents a number of potential difficulties such as the effects of magnetic shear, steep density gradients, and limited time for cross-correlations. In addition, recent simulations suggest that 2D modeling may be required to interpret experimental data when density fluctuation levels are high. Dual mode correlation reflectometry experiments on the National Spherical Torus Experiment (NSTX) are presented, and progress toward the implementation of this technique as a practical diagnostic is discussed.

I. INTRODUCTION

Accurate knowledge of the magnetic field in magnetic confinement fusion devices is important for such critical issues as assessment of magnetohydrodynamic (MHD) equilibrium and stability, and suppression of microturbulence by E×B flow shear. However, in the emerging class of low-field magnetic confinement devices, such as the National Spherical Torus Experiment (NSTX)[1] direct transfer of existing magnetic field diagnostics such as motional Stark effect (MSE)[2], multichord polarimetry[3], and simultaneous O- and X-mode profile reflectometery[4] will be difficult due to the low field and restricted port access.

An alternate approach to magnetic field measurement internal to the plasma, based on cross-correlation of O- and X-mode fluctuation reflectometer channels has been previously demonstrated in the linear LArge Plasma Device (LAPD).[5,6] This technique relies on finding the O- and X-mode frequency pair (f_o , f_x) where cross-correlation of signals originating from naturally occurring turbulence is maximum. It was found that the experimental data could be interpreted via a one dimensional (1D) full wave model to determine $|\underline{B}|$ in the vicinity of the cutoffs. Simultaneous to $|\underline{B}|$, correlation properties of turbulence such as radial correlation length, coherency, and power spectra are also measured.

While the proof of principle experiments established this technique as plausible, a number of potential difficulties exist with transferring the measurement to a toroidal magnetic confinement fusion devices, including the effects of magnetic shear, extremely steep density gradients, and limited time for cross-correlations. In order to establish the feasibility of this diagnostic in such devices, experiments have been carried out on NSTX using a two channel 20-30 GHz correlation reflectometer operated in a dual mode configuration. O-X correlation measurements were made in the outer core plasma (r/a ≈ 0.85-0.95, where r is the minor radius cutoff position, and a is the last closed flux surface radius) under a variety of conditions, including ohmically heated, neutral beam (NBI) heated, and radio frequency (RF) heated L-mode and H-mode plasmas. It was found that O-X correlation reflectometry in NSTX performed basically as expected from the proof of principle experiments. Local values $|\underline{B}|$ determined from O-X reflectometry were in good agreement with $|\underline{B}|$ found from plasma equilibrium reconstructions using the EFIT code.[7] O↔X mode conversion did not appear to pose a serious problem for the measurements in spite of the relatively high magnetic shear in NSTX. The diagnostic appeared to function well under most plasma conditions, the exception being plasmas with very steep density gradients relative to the radial turbulent correlation length, where slow decorrelation of the two channels made determination of the peak cross-correlation frequency pair (f_o, f_x) prone to error.

[†] Address as of Jan. 2003: *Electrical and Computer Engineering Dept., University of New Mexico, Albuquerque, NM, 87131, USA.* Electronic mail: *gilmore@eece.unm.edu.*

II. PRINCIPLE OF THE DIAGNOSTIC

If O- and X-mode fluctuation reflectometer signals originating from naturally occurring density fluctuations are cross-correlated, the correlation would be expected to maximize when the O- and X-mode cutoff layers overlap spatially, assuming the relfectometer signals originate from the cutoffs. The O-mode cutoff frequency occurs at $f_o = f_p$, while the X-mode cutoff (upper branch) is given by $f_x = f_R = \left(f_c + \sqrt{f_c^2 + 4 f_p^2} \right)/2$, where f_p and f_R are the electron plasma and righthand cutoff frequencies respectively. Therefore, when the O- and X-mode cutoffs overlap spatially, f_x can be written

$$f_x = \frac{1}{2}\left(f_c + \sqrt{f_c^2 + 4 f_o^2} \right). \qquad (1)$$

Here $f_p \equiv \sqrt{ne^2/\varepsilon_0 m}\big/2\pi$, f_c = eB/m is the electron cyclotron frequency, ε_0 is the permittivity of free space, and n, m and e are the electron density, mass, and charge respectively. In principle, then, $|\underline{B}|$ at the cutoff position can be determined using eqn. (1) from the frequency pair (f_o, f_x) where cross-correlation is maximum.

In the proof of principle experiments, however, it was found that cross-correlation between O- and X-mode channels maximized at an X-mode frequency slightly lower than f_R. This indicates that the reflectometer signals originate from somewhat in front of the cutoff layers, consistent with momentum conservation given by the Bragg scattering condition.[8] The X-mode frequency of peak cross-correlation, $f_{x,pk}$, could be accurately predicted by a 1D numerical model, given the density gradient scale length, L_n, at cutoff, and the radial wavenumber spectral width, Δk, of the turbulence. Therefore, given the measured frequency pair (f_o, f_x) where cross-correlation is maximum, the experimental data could be interpreted by the numerical model, run iteratively, to determine the local $|\underline{B}|$ near cutoff.

Subsequent 1D and 2D modeling by Kramer *et al.*[9] showed a decrease in the maximum cross-correlation value with increasing $|\underline{B}|$ as density fluctuation levels, $\tilde{n}/n$, increased, consistent with experiments.[6] In addition, it was found that $f_{x,pk}$ shifted further below f_R as $\tilde{n}/n$ increased.[9] Therefore, it was suggested that an estimate of $\tilde{n}/n$ was required along with L_n and Δk in order to interpret the experimental data, and that 2D modeling might be required if $\tilde{n}/n$ was too high.

III. EXPERIMENTAL SETUP

A simplified schematic of the homodyne 20-30 GHz dual mode correlation reflectometer is shown in Fig. 1. The two channel system operates by fixing one frequency, f_1, and slowly sweeping the second frequency, f_2. f_1 and f_2 sources are highly frequency stabile YIG tuned oscillators which are

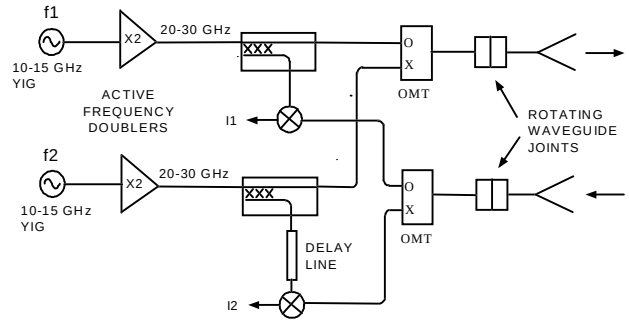

FIG. 1. 20-30 GHz dual mode correlation reflectometer circuit diagram (simplified).

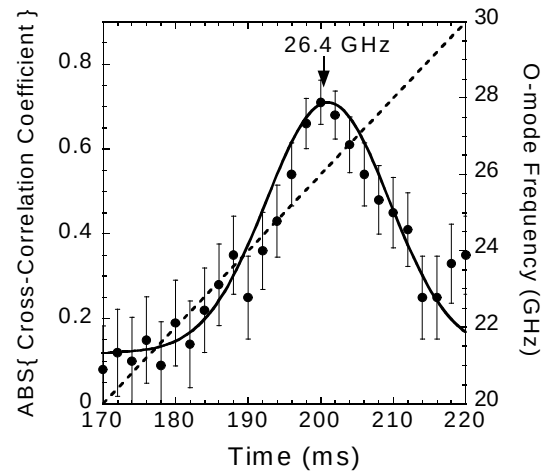

FIG. 2. O-X cross-correlation in swept O-mode configuration. fx = 30 GHz, fo swept 20-30 GHz as shown. Shot 106387. Dashed line: f_o, solid line: Gaussian fit to data.

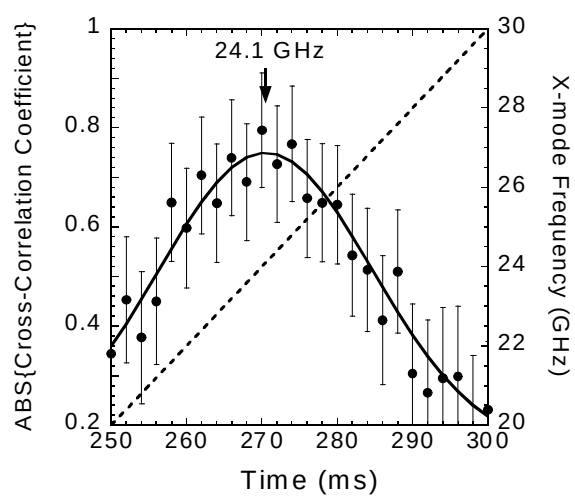

FIG. 3. O-X cross-correlation in swept X-mode configuration. fo = 20 GHz, fx swept 20-30 GHz as shown. Shot 108250. Dashed line: f_x, solid line: Gaussian fit to data.

TABLE 1. Example comparisons of $|\underline{B}|$ measured by O-X correlation reflectometry with values from EFIT reconstructions under various conditions in NSTX.

Shot	Time Range (ms)	Condition	$B_{toroidal}$ on axis (T)	Reflecto-meter Cutoff Major Radius (cm)	L_n (cm)	$\|\underline{B}\|$ at cutoff from EFIT (T)	Swept Channel (O/X)	$\|\underline{B}\|$ at cutoff from O-X Reflectometer (T)
106360	170-220	ohmic	0.45	121	27	0.39	O	0.38± 0.015
106387	170-220	NBI, L-mode	0.40	147	5	0.24	O	0.25 ± 0.015
108250	250-300	NBI+RF, L-mode	0.35	151	10	0.30	X	0.30±0.014
108270	250-300	NBI+RF, L-mode	4.5	151	8	0.32	X	0.31±0.015
108723	475-550	NBI, L-mode	4.25	146	6	0.35	X	0.35±0.017
108727	300-350	NBI, L-mode	5.0	147	8	0.39	X	0.39±0.012
108727	375-450	H-mode	5.0	149	5	0.37	X	0.38±0.015
108728	225-300	H-mode	5.5	147	3	0.37	X	0.37±0.015

magnetically shielded. O- and X-polarized radiation is combined into circular waveguide by an ortho mode transducer (OMT) and launched via a circular horn antenna located inside the vacuum vessel on the NSTX outboard midplane. The circular waveguide contains a rotating joint to allow arbitrary alignment of the launched polarizations. The bulk of the circuit is constructed from high frequency coaxial cable and devices, with transitions to waveguide at the OMTs.

After digitizing at 1 Msample/s, the two intermediate frequencies, I_1, I_2, were cross-correlated. In these experiments, f_2 was typically swept full band (20-30 GHz) in 50-100 ms. Cross-correlation $\langle I_1,I_2\rangle$ was generally performed over 50 – 150 μs time windows. The length of the f_2 channel delay line – which is simply 580 cm of high frequency coaxial cable - was chosen to space the "correlation fringes"[10] roughly 200 MHz apart, allowing ≥ 20 cross-correlations per fringe to be calculated typically.

IV. EXPERIMENTAL RESULTS AND INTERPRETATION

The dual polarization reflectometer was operated in two modes: 1. with fixed O-mode frequency, f_o, and swept X-mode frequency, f_x, and 2. with fixed f_x and swept f_o. Figures 2 and 3 show typical cross-correlation results in the swept O-mode and X-mode configurations respectively from NBI heated L-mode discharges. For clarity, only the values of cross-correlation at the correlation fringe peaks are shown. The figures also show least mean squared error Gaussian fits to the data. In the case of Fig. 2, f_x was fixed at 30 GHz, while the f_o was swept over 20-30 GHz in 50 ms. Cross-correlation in this case was found from the Gaussian fit to peak at $f_o = 26.4 \pm 0.15$ GHz. This frequency corresponds to an O-mode cutoff position at major radius R = 147 ± 0.5 cm, as determined from an interpolated fit to the electron density profile at 193 ms from multi point Thomson scattering (MPTS) measurements.[11] In the Fig. 3 case, f_o was fixed at 20 GHz while the f_x was swept 20-30 GHz, and cross-correlation was found to peak at $f_x = 24.1 \pm 0.14$ GHz at R = 151 ± 0.5 cm.

To derive the magnetic field strength in the case shown in Fig. 2, the 1D full wave reflectometry model[6] was run iteratively to yield $|\underline{B}| = 0.25 \pm 0.015$ T at R = 147 cm. The parameters $L_n \equiv \{(1/n)dn/dR\}^{-1} = 5.4$ cm (from MPTS) and $\Delta k = 2\sqrt{2}/\Delta r = 1.6$ cm^{-1}, where Δr is the Gaussian 1/e radial correlation length[6] (derived from the 1/e width of the cross-correlation shown in Fig. 2) were used in the simulations. The error on $|\underline{B}|$, ± 6%, was taken as the range of magnetic field strengths that could produce a peak cross-correlation at $f_o = 26.4 \pm 0.15$ GHz, accounting for statistical error in the simulation,[6] and errors in cutoff radius (147 cm), L_n, and Δr. A detailed description of the error analysis is given in ref. 6. It was found that statistical error in the experiment and simulation strongly dominated over errors in the density profile.

No other measurement of $|\underline{B}|$ in the plasma was available. However, comparisons with the magnetic field from equilibrium reconstructions from EFIT using external magnetics data were made. In this case, the corresponding value of $|\underline{B}|$ from EFIT at this radius at 193 ms was 0.24 T.

Similar performance was found under other plasma conditions and in the swept X-mode configuration on 4 days of operation. A sample of results is shown in Table 1. In general, the diagnostic yielded values of $|\underline{B}|$ in agreement with EFIT reconstructed values within the error bars, as can be seen in the table. One condition in which this system

failed to perform adequately, however, were cases of plasmas that had a particularly steep edge electron density gradients relative to the turbulent radial correlation length. In these cases, the reflectometer channels still showed high correlation even at a frequency separation of 10 GHz. It was therefore impossible to perform a Gauassian fit to the correlation envelope that had sufficiently small error to derive a meaningful value of $|\underline{B}|$. This failure to decorrelate posed less of a problem in H-mode discharges, where although very steep density gradients occur in the edge, measured radial correlation lengths are typically shorter.

An anticipated difficulty with O-X reflectometry in NSTX was O↔X mode conversion due to the relatively high (and time varying) magnetic shear in the spherical torus (ST) geometry.[1,12] However, O↔X conversion did not appear to pose a serious problem in these measurements. In the experiments, the launched polarization was aligned to the anticipated steady state magnetic field pitch angle at the plasma edge, approximately +50° from horizontal, and no further compensation was made. Although the pitch angle varies strongly in the ST as the plasma current ramps up, it is relatively constant during the current flattop portion of the discharge, allowing O-X correlation measurements to be made during these times.

There was, though, some evidence of single mode correlation (e.g. X-X) in the data. For example, in Fig. 2 at times 216-220 ms, an increase in cross-correlation can be seen. This could be due to the presence of some X-polarized power in channel 2 which then correlated with channel 1 at 30 GHz. The presence of this X-mode power could be due to misalignment of the launched polarization at the plasma edge (most likely) or O→X mode conversion. On the assumption that this was X-polarized power in channel 2, a second Gaussian centered at f_2 = 30 GHz was subtracted. Cases where these two correlation functions overlapped more directly would be more problematic, of course, but even if the X-X correlation was not accounted for, the error on a derived $|\underline{B}|$ would be small.

Maximum values of cross-correlation (e.g. the peak value of about 0.7 at 200 ms in Fig. 2) fell in the range 0.6 – 0.8 under the range of plasma conditions shown in Table 1. Since this reflectometer is homodyne, it was not possible to investigate absolute density fluctuation levels, and no other diagnostic of $\tilde{n}/n$ was available. However, given the close agreement with $|\underline{B}|$ from EFIT reconstructions, it appears that high fluctuation levels do not pose a practical difficulty, and that interpretation of data via the 1D model is sufficient. On the other hand, $|\underline{B}(R)|$ was slowly varying at these edge radii, so error in determining the spatial position where O-X cross-correlation was maximum may have resulted in very small error in $|\underline{B}|$. This issue will continue to be examined as the database of experiments grows.

V. SUMMARY

Dual mode correlation reflectometry experiments conducted in NSTX to determine $|\underline{B}|$ internal to the plasma have been presented. The goal of these experiments was to establish the feasibility of transferring this technique – which had been proven previously in a linear device – to a low field toroidal magnetic confinement fusion plasma. It was found that this technique behaved as expected from the proof of principle experiments. By finding the frequency pair (f_o,f_x) where O-X cross-correlation maximized, $|\underline{B}|$ near cutoff could be determined from a 1D numerical model, given values of L_n at cutoff and the radial turbulent wavenumber spectral width, Δk. The diagnostic appeared to function under a variety of discharge conditions. However, in plasmas with very steep electron density gradients relative to the radial correlation lenght, the O- and X-channels failed to decorrelate significantly over the 10 GHz bandwidth making determination of the frequency of peak cross-correlation prone to large error. In most cases studied, though, magnetic field strengths were found to be in agreement with $|\underline{B}|$ given by EFIT reconstructions, within the error bars. Typical error in $|\underline{B}|$ was ± 6%, and was dominated by statistical error.

There are two clear shortcomings of this experimental system. First is the relatively large level of statistical error which leads to the ±6% error (typically) in $|\underline{B}|$. Second is the poor time resolution of these measurements (sweep time ≥ 50 ms), especially compared to the relatively short discharges in NSTX (300-800 ms, typ.). Sweeping channel 2 faster would improve time resolution, but add statistical error since there would be less time over which to cross-correlate. An obvious solution is to add more channels, each of which is swept over a smaller frequency range, thereby allowing more time for correlation at a given frequency interval. An optimzed practical system would trade off number of channels, time resolution, and level of statistical error.

From the data and observations on NSTX presented here, we conclude that a magnetic field strength diagnostic for low field magnetic fusion plasmas based on dual mode correlation reflectometry is feasible. While the accuracy of such a $|\underline{B}|$ measurement would likely be limited to a few percent, it could still be a relatively low cost method for determining field strength to this level in strongly diamagnetic or paramagnetic plasmas where $|\underline{B}|$ is much different from vacuum values. In addition, no neutral beam is required (as for MSE), so it could be useful for RF heated plasmas if no diagnostic beam is available.

ACKNOWLEDGEMENTS

The authors greatfully acknowledge the contributions of S.A. Sabbagh, B.P. LeBlanc, and the NSTX team, and useful discussions with G.J. Kramer and R. Nazikian. This work was supported by the U.S. Department of Energy under grant No. DE-FG03-99ER54527.

[1] Kaye, S.M. *et al* Fusion Technol. **36** 16 (1999).
[2] Levinton F. M., Rev Sci Instrum **70** 810 (1999).
[3] Luhmann, N.C., Jr. and Peebles, W.A., Rev. Sci. Instrumen. **55** 279 (1984).

[4] Bruce I. Cohen *et al* Plasma Phys Control Fusion **40** 75 (1998).
[5] W. Gekelman, *et al*., Rev. Sci. Instrum. **62**, 2875 (1991).
[6] M. Gilmore, W.A. Peebles, and X.V. Nguyen, Plasma Phys. Control. Fusion **42**, 655 (2000).
[7] Sabbagh, S.A. *et al* Nuclear Fusion **41** 1601 (2001).
[8] Bedros B. Afeyan, Albert E. Chou, and Bruce I. Cohen, Plasma Phys Control Fusion **37** 315 (1995).
[9] Kramer, G.J., Nazikian, R., and Valeo, E.J., Plasma Phys Control Fusion **44** L11 (2002).
[10] Sanchez, J., Brañas, B., de la Luna, E., and Estrada, T. Rev Sci Instrumen **64** 487 (1993).
[11] LeBlanc. B.P., *et al, these proceedings*
[12] Nagatsu, M., Hayashi, T., Tsukishima, T., Jap. J. Appl. Phys. Part 1 **34** 3708 (1995).