NOTES

1. INTERPRET DRAWING PER MECHANICAL ENGINEERING DRAFTING STANDARD ES-3.1-2.
2. INTERPRET DIMENSIONS AND TOLERANCES PER ANSI Y14.5M.
3. DIMENSIONS ARE IN INCHES.
4. AFTER FINAL POSITIONING OF ALL BRACKETS AND SECURING OF FASTENERS, TACK WELD ALL BRACKETS IN PLACE. REMOVE FASTENERS AND ADD 1/4" FILLET WELDS TO INSIDE DIAMETER OF FASTENER HOLES. WELD BRACKETS TO EARS WITH 1/4" FILLET WELDS AS SHOWN.

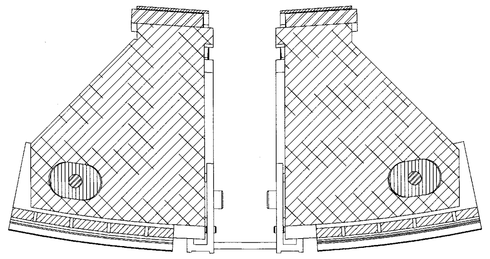

SECTION B-B

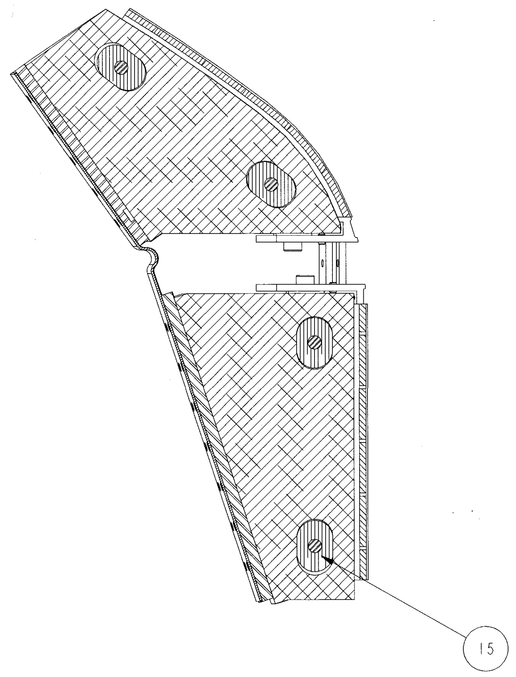

SECTION A-A

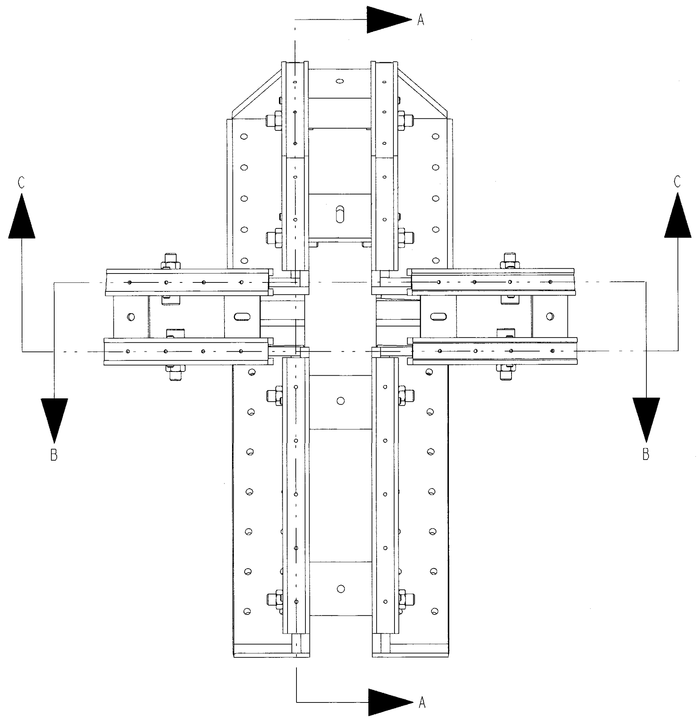

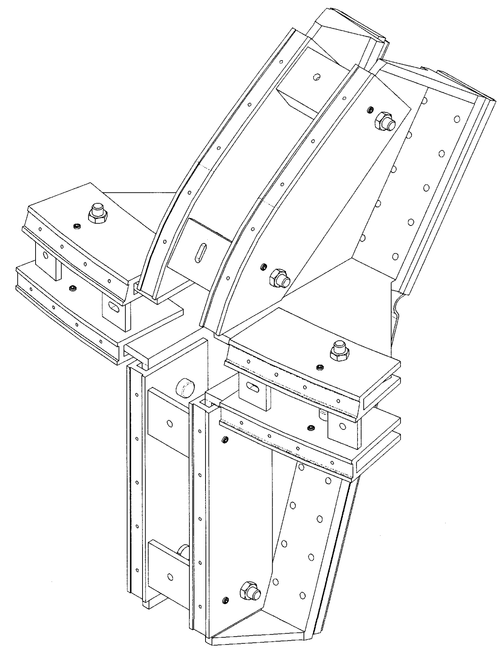

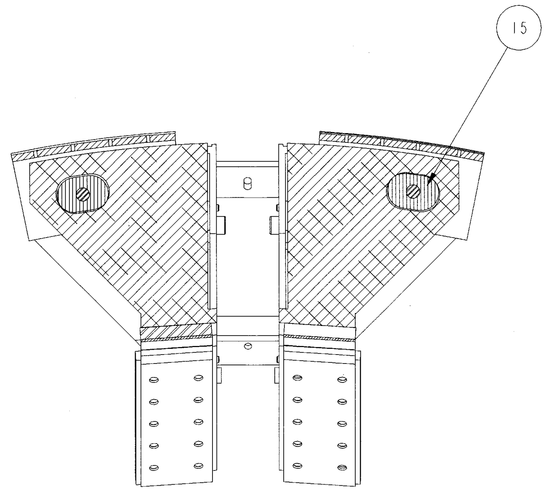

SECTION C-C

DES	NSTX-0005 R 0	DATE REC 6/98
	PRINCETON UNIVERSITY PLASMA PHYSICS LABORATORY NATIONAL SPHERICAL TORUS EXPERIMENT	
PO	ITEM	
A DRAWING REVIEW	NO COMMENTS, PRINT TO VENDOR	1
	COMMENTS AS NOTED, PRINT TO VENDOR	2
	DRAWING NOT APPLICABLE, PRINT TO VENDOR	3
	NO COMMENTS, NO PRINT TO VENDOR	4
	FOR INFORMATION ONLY	5
B FABRICATION NOT PROCEED	NO FURTHER REPRODUCIBLE REQUIRED	1
	SUBMIT REVISED REPRODUCIBLE	3
	NO FURTHER REPRODUCIBLE REQUIRED	3
	SUBMIT REVISED REPRODUCIBLE	4

X3E017104A540

NO REPRESENTATION OR WARRANTY, EXPRESSED OR IMPLIED, IS MADE AS TO THE ACCURACY, COMPLETENESS OR USEFULNESS OF THE INFORMATION OR STATEMENTS CONTAINED IN THESE DRAWINGS, OR THAT THE USE OR DISCLOSURE OF ANY INFORMATION, APPARATUS, METHOD OR PROCESS DISCLOSED IN THESE DRAWINGS MAY NOT INFRINGE PRIVATE RIGHTS OF OTHERS. NO LIABILITY IS ASSUMED WITH RESPECT TO THE USE OF, OR FOR DAMAGES RESULTING FROM THE USE OF, ANY INFORMATION, APPARATUS, METHOD OR PROCESS DISCLOSED IN THESE DRAWINGS. DRAWINGS MADE AVAILABLE FOR INFORMATION TO BIDDER ARE NOT TO BE USED FOR OTHER PURPOSES, AND ARE TO BE RETURNED UPON REQUEST OF THE FORWARDING CONTRACTOR.

P THIS DRAWING PRODUCED ON PRO-ENGINEER

THIS DOCUMENT CONTROLLED BY
CHANGE CONTROL SYSTEM 3
ENGINEERING PROCEDURE EP-C-18

REV	CHANGE TYPE	CHANGE CONTROL SYSTEM	CHANGE REQUEST NUMBER	DESCRIPTION	A-E	BY	CHK	SECT	DEPT	DATE	PE	REQ	DATE	LM-ES	DATE	DOE	DATE	QA	CV	EC	EE	EM	IE	M	PD	SE	ST	XAD	PES
				REVISION OR ISSUE PURPOSE					REVISION APPROVALS									SQUAD CHECK											

SCALE .25

TOLERANCES UNLESS OTHERWISE SPECIFIED

FRACTIONS :
XX DECIMALS ±.01
XXX DECIMALS ±.005
ANGLES ±0°15'
BREAK SHARP EDGES .06 MAX
FINISH .125 UNLESS OTHERWISE SPECIFIED

DES	P GORANSON	02/98
DRW	MT BROWN	04/98
CHK		
SECT		
DEPT		
PE		
CR		
PJ		
REQ		

DRAWING APPROVALS | DATE

LOCKHEED MARTIN LOCKHEED MARTIN ENERGY SYSTEMS, INC.
operated for the DEPARTMENT OF ENERGY under U.S. GOVERNMENT contract DE-AC-05-84OR21400
Oak Ridge, Tennessee • Paducah, Kentucky

PROJECT NAME
NSTX

PASSIVE PLATE SUPPORT BRACKET WITH WELD EARS ASSEMBLY

1	48	49	50	PLANT	BLDG	FL	SHT	OF	TYPE	CLASS
3	M	E	U	Y-12	FEDC	1	2	2	A	U

51	52	53		REV
&bb51	&bb52	&bb53	X3E017104A540	0