HELICITY STUDIES

M.J. Schaffer and J.A. Boedo [1]

General Atomics, San Diego, CA, USA
[1] UCSD, San Diego, CA, USA

NSTX Research Forum
PPPL
2003 November 10 - 12

CHI Raises Basic Physics Questions of Helicity Transport

NSTX

- Helicity transport theory predicts that magnetic surfaces must be open (either intermittently or steadily) to sustain current.
  - Open surfaces reduce hot plasma confinement.
- How does CHI operate in STs to distribute plasma current on the "closed" surfaces?
  - Is this scalable to larger devices and stronger B?
  - Is this compatible with good confinement, or will CHI be limited to just a startup role?
- Need THEORY and MEASUREMENT

GENERAL ATOMICS

Magnetic Helicity was Defined in a Quite General and Physically Meaning ful Way by Berger and Field

Berger-Field RELATIVE HELICITY is the ***difference*** between two simple A·B products over all space, V_∞,

Berger & Field, J. Flu id Mech . 147 (1984) 133.

$$K_{rel} = \int_{V_\infty} A \cdot B \, d^3x - \int_{V_\infty} A_{ref} \cdot B_{ref} \, d^3x$$

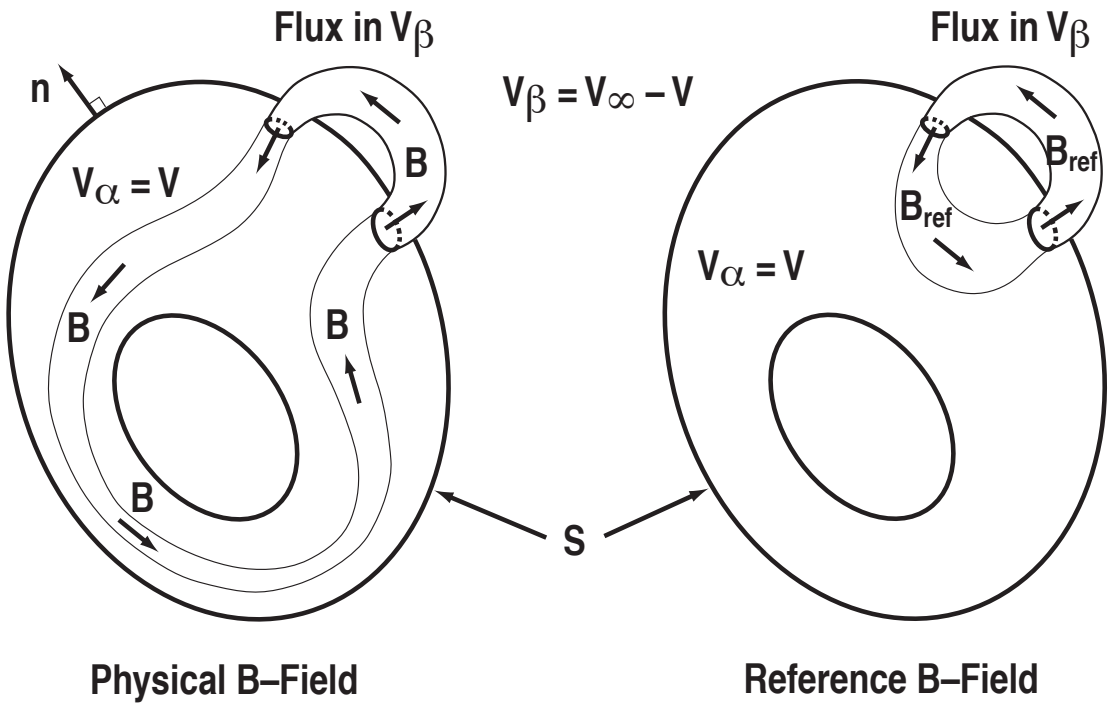

Outside of the volume V of interest, $B_{ref} = B$.

GENERAL ATOMICS

The Moses- Gerwin -Schoenberg Helicity is Simpler

- Berger-Field relative helicity is gauge indep endent in an arbitrary V and independent of external fields and linkages, even if S is not a mag netic surface, under the generalized condition

$$\mathbf{A}_{ref} \times \hat{\mathbf{n}} = \mathbf{A} \times \hat{\mathbf{n}} \text{ on } S.$$

This includes the famili ar $\hat{\mathbf{n}} \cdot \mathbf{B}_{ref} = \hat{\mathbf{n}} \cdot \mathbf{B}$ on S.

Best choice of a reference field can depend on the physical problem.

- In contrast, Moses et al. define a magnetic helicity in volume V as simp ly

$$K_{Moses} = \int_V \mathbf{A} \cdot \mathbf{B}\, d^3x \text{ with } \mathbf{A} = \hat{\mathbf{n}} \times \nabla\Psi \text{ on } S.$$

This sets $\nabla \cdot A = 0$ and $A \cdot n = 0$ on S, which yields unique gauge and helicity.

They use no reference fields . Moses, Gerwin , Schoenber g, Phys. Plasm as 8 (2001) 4839.

Time Derivative of Relative Helicity in General Requires Fields and Boundary Conditions on *Moving* Surface

NSTX

Let U(x,t) be velocity of a coordinate point on S(x,t) and moving with it.

U(x,t) is measured in a fixed, non-deforming coordinate system.

U is perpendicular to S(x,t).

Let (´) denote quantities measured at rest on the moving S.

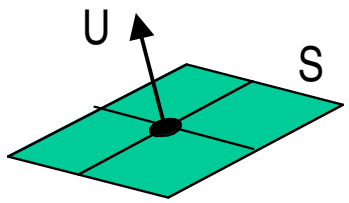

Galilean relativity:

$$\mathbf{B}' = \mathbf{B} \qquad \mathbf{A}' = \mathbf{A} \qquad \mathbf{E}' = \mathbf{E} + \mathbf{U} \times \mathbf{B} \qquad \phi' = \phi - \mathbf{U} \cdot \mathbf{A}$$

$$\frac{\partial \mathbf{A}'}{\partial t} = \frac{\partial \mathbf{A}}{\partial t} - \mathbf{U} \times \mathbf{B} + \nabla(\mathbf{U} \cdot \mathbf{A}) = \frac{\partial \mathbf{A}}{\partial t} + \mathbf{U} \cdot \nabla \mathbf{A} = \frac{d\mathbf{A}}{dt}$$

$$\mathbf{E} = -\frac{\partial \mathbf{A}}{\partial t} - \nabla\phi, \qquad \mathbf{E}' = -\frac{\partial \mathbf{A}'}{\partial t} - \nabla\phi'$$

Boundary conditions:

$$\frac{\partial \mathbf{A}'_{ref}}{\partial t} \times \hat{n} = \frac{\partial \mathbf{A}'}{\partial t} \times \hat{n} \qquad \phi'_{ref} = \phi' \qquad \mathbf{E}'_{ref} \times \hat{n} = \mathbf{E}' \times \hat{n}$$

GENERAL ATOMICS

Time Derivative of Magneti c Helicity Can Take Various Forms

NSTX

$$\frac{dK_{rel}}{dt} = -\int_{V(t)} 2E \cdot B\, d^3x + \int_{V(t)} 2E_{ref} \cdot B_{ref}\, d^3x$$

$$\frac{dK_{rel}}{dt} = -\int_{S(t)} \left(E' \times A + \phi' B\right) \cdot \hat{n}\, d^2x - 2\int_{V(t)} E \cdot B\, d^3x - \frac{d}{dt}\int_{V(t)} A_{ref} \cdot B_{ref}\, d^3x$$

$$= -\int_{S(t)} \left(A \times \frac{\partial A'}{\partial t} + 2\phi' B\right) \cdot \hat{n}\, d^2x - 2\int_{V(t)} E \cdot B\, d^3x - \frac{d}{dt}\int_{V(t)} A_{ref} \cdot B_{ref}\, d^3x$$

Moses et al:

$$\frac{dK_{Moses}}{dt} = -\int_{S(t)} \left(A \times \frac{\partial A}{\partial t} + 2\phi B\right) \cdot \hat{n}\, d^2x - 2\int_{V(t)} E \cdot B\, d^3x$$

- Much of the confusion over application of magnetic hel icity arises from how to interpret the various terms .

GENERAL ATOMICS

Moses-Gerwin-Schoenberg Helicity is a Special Case of Berger-Field Relative Helicity

NSTX

- The Moses et al. choice of $A \cdot n = 0$ is consistent with Berger-Field, whose relative helicity does not constrain the choice of $\nabla \cdot A$ or $A \cdot n$.
- When $A \cdot n = 0$, then $U \cdot A = 0$, too, since $U \parallel n$.
  - Then, it can then be shown that the Berger-Field boundary conditions can be written identically in terms of <u>either</u> moving-frame or fixed-frame variables.
- It appears that the Moses et al. helicity is a special case of Berger-Field relative helicity, except for no reference helicity.
  - Moses et al is simpler than Berger-Field, but do Moses et al. ever need to subtract reference fields?
- I want to derive Moses et al. explicitly for toroidal volumes and with close attention to conditions at moving surfaces.

GENERAL ATOMICS

Magnetic Helicity Flux is a Measurable Quantity

NSTX

- Helicity transported across a closed surface S(x,t) boundin g a volume V(x,t) can be written as

$$\text{Helicity out of S} = \int_{S(t)} \left(\mathbf{A}' \times \frac{\partial \mathbf{A}'}{\partial t} + \phi' \mathbf{B}' \right) \cdot \hat{n}\, d^2x$$

- With Moses' gauge for A, we can drop the primes (moving coordinate system on S) and use variables in fixed l ab frame, and also use

$$\int_{S(t)} \mathbf{A}' \times \frac{\partial \mathbf{A}'}{\partial t} \cdot \hat{n}\, d^2x = 0.$$

- Therefore, we only need to measure one simp le helicity flux term,

$$\overline{\phi \mathbf{B}} \cdot \hat{n}$$

I.e., B normal to an average magnetic surface and the *plasma* potential

GENERAL ATOMICS

Basic Helicity Flux Probe

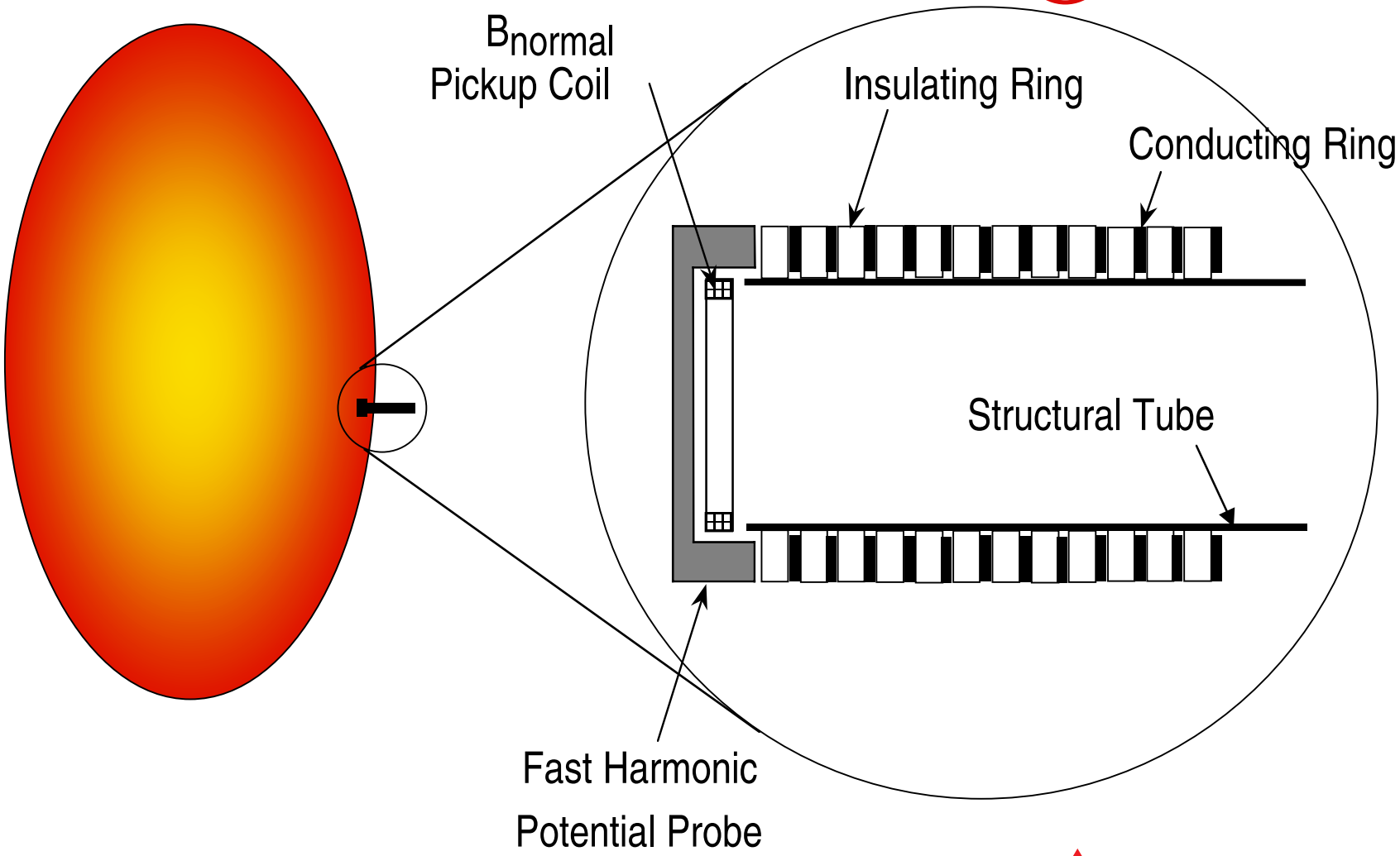

Helicity Flux could be Measured with the UCSD Reciprocating Probe

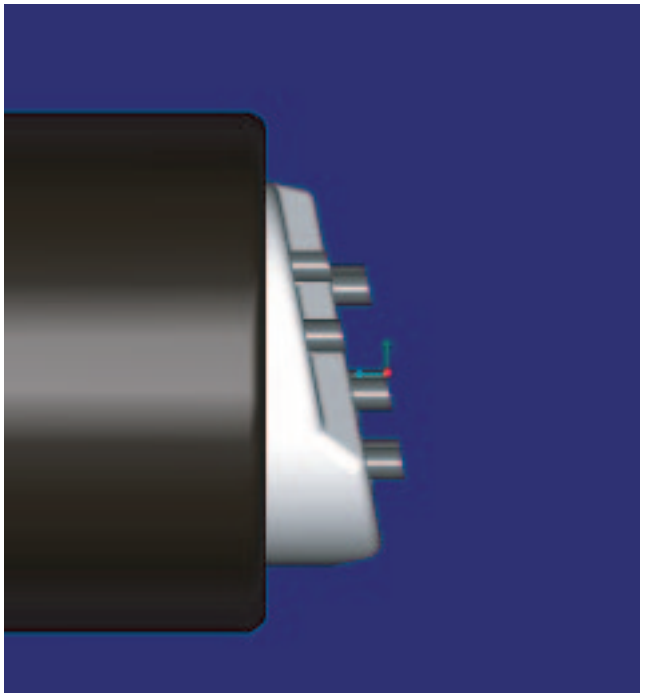

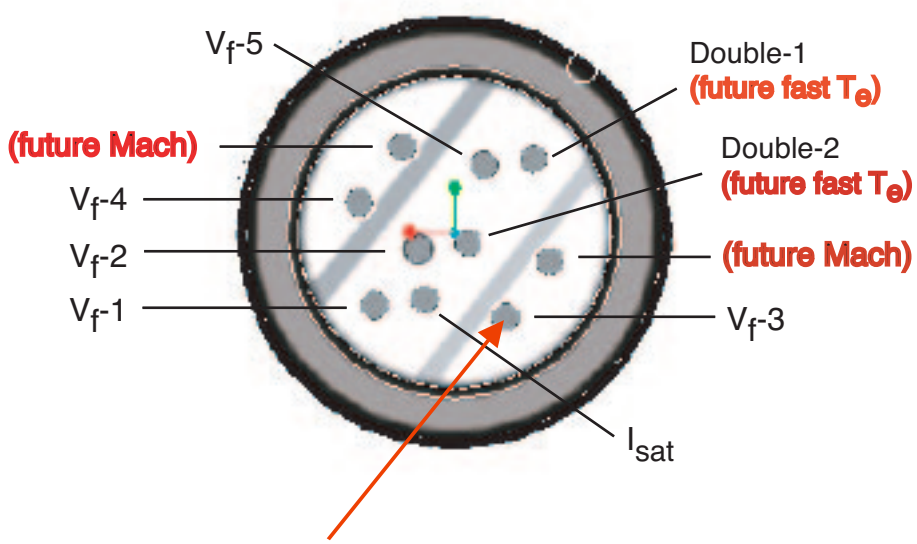

Small B_{normal} magnetic probe could replace V_f-3 or V_f-4

The proposed dynamo probe head (H. Ji et al.) with 3-axis magnetic probes could measure helicity flux, too.

Proposed Work

- Finish a general theory of helicity transport
  - Write archival paper
- Propose to measure helicity flux with the reciprocating probe
  - Work with Jose Boedo and Hantao Ji on new probe head design
- Goal is to understand helicity flux during CHI in STs.