Anti-CHI for density control in a H-mode discharge

[1]Roger Raman, [2]Dennis Mueller, [2]Stewart Zweben
1-University of Washington,
2-Princeton Plasma Physics Laboratory

NSTX Research Forum for Fy04
Boundary Physics Session
Princeton Plasma Physics Laboratory
September 22 - 24, 2004

Several diverted tokamaks have used biasing to usefully control edge flows

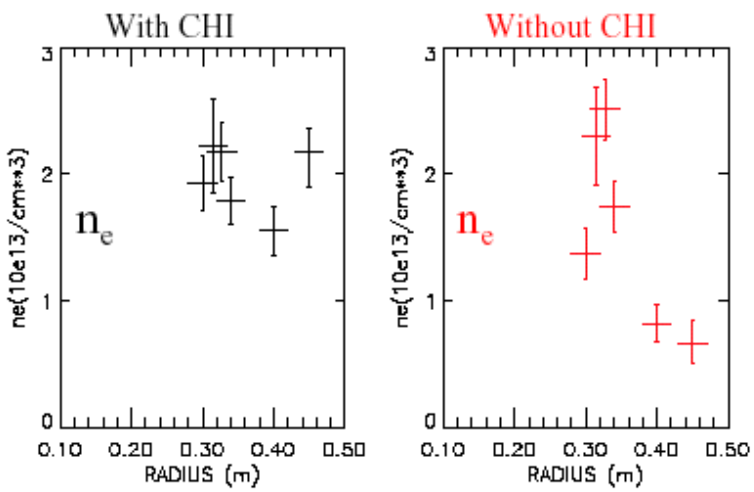

D. Mueller et al., APS 2003 poster on HIT-II edge current drive expts.

- In HIT-II, edge n_e increases by a large factor (~ 4 to 5) when the inner electrode is biased negative
- During CHI, E X B_{tor} drift is directed away from the divertor
- Similar result seen in biased tokamaks

To reduce central density bias inner vessel positive with respect to outer vessel

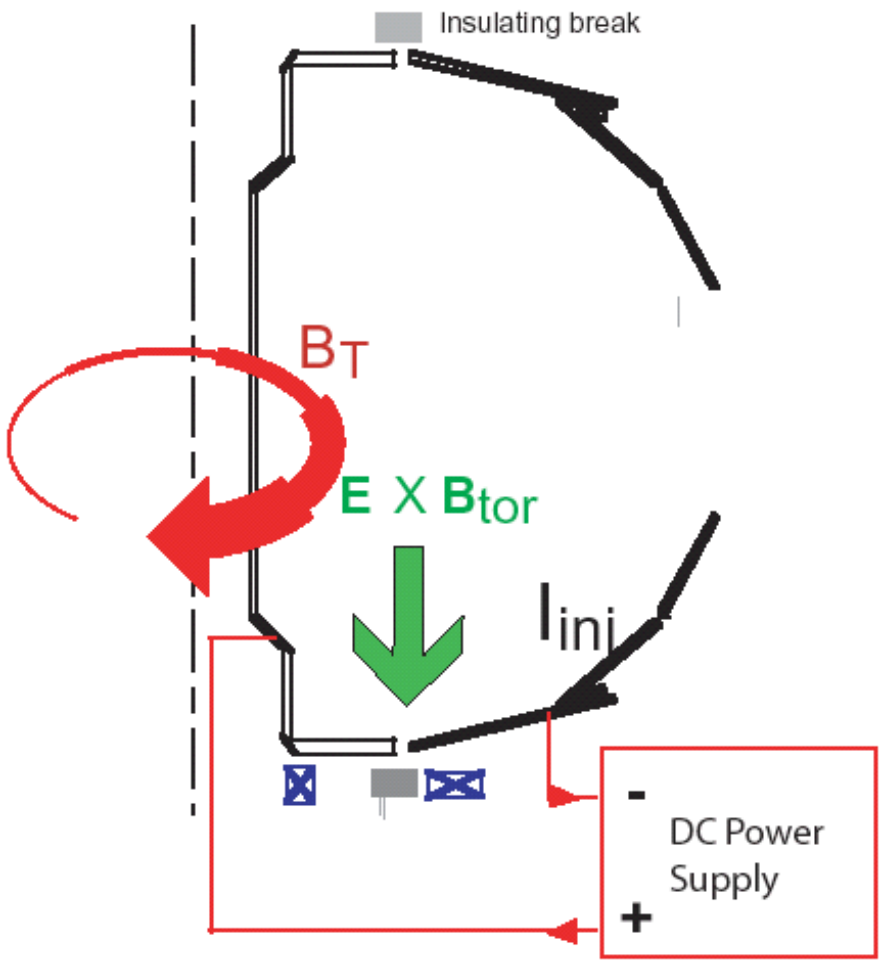

- E X B_{tor} directed towards lower divertor
- Deplete SOL
- Reduced n_e in SOL reduces source for particle influx

NSTX and DIII-D configurations

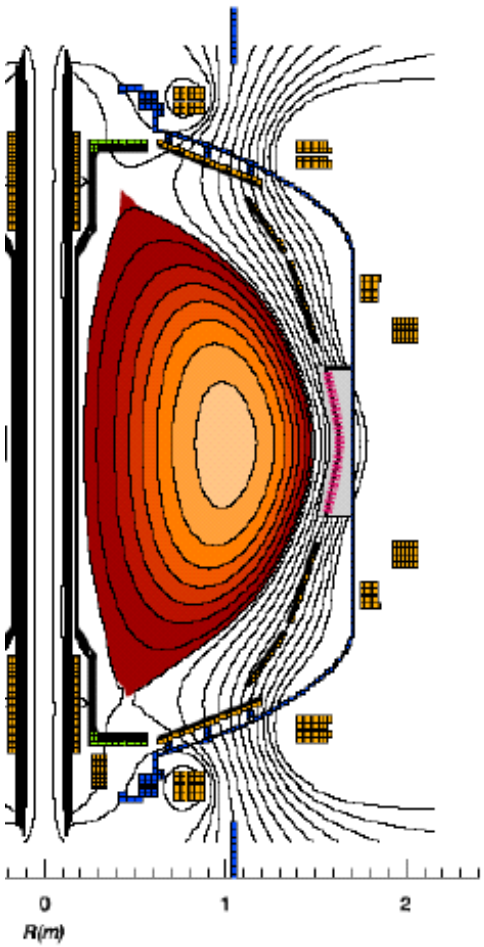

D. Gates, NSTX Results Review 04

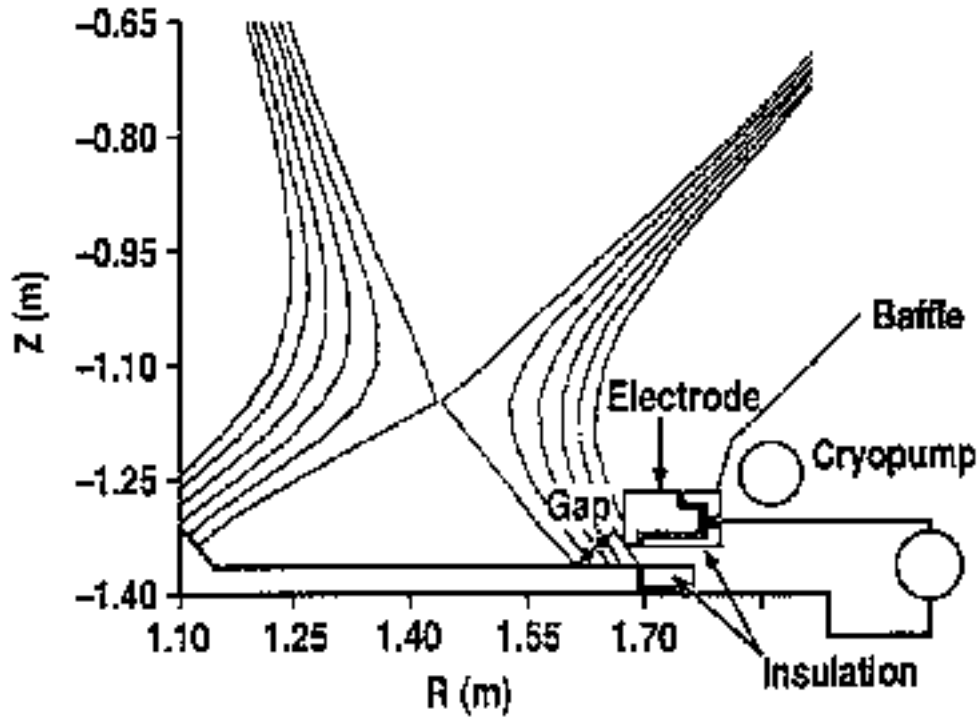

Schaffer, Maingi, Hyatt, Ali Mahdavi, Nucl. Fusion Lett, 495 (1996)

Run Plan

- Configure CHI DC PS for about +200V, limit current to < 1kA
- Consider alternate smaller power supply
- Test during a commissioning day for noise pickup

- Apply 100 to 200V in 100ms pulses to a reference high density discharge (as part of BP XP)
  - Measure Te, n_e profiles (with emphasis at the edge)
  - Measure edge rotation and flow velocity
  - Use other edge diagnostics, edge neutral press
  - Verify if edge and or central density drops
  - If successful, extend to reference H-mode plasmas for density control (as part of ISD XP)