EC16 @ Sanya, China, April 12-15

# Development of high power long pulse ITER gyrotrons

Keishi Sakamoto, Ken Kajiwara, Yasuhisa Oda, Koji Takahashi, Kazuo Hayashi, Noriyuki Kobayashi, Yukio Okazaki, Takayuki Kobayashi, Shinichi Moriyama

*Japan Atomic Energy Agency (JAEA) 801-1 Mukoyama, Naka-shi, Ibaraki 311-0193 Japan*

Mark Henderson, Caroline Darbos

*ITER Organization, St. Paul-lez-Durance, 13067 France*

# Contents

(1) Reliability test of ITER gyrotron

(2) 5kHz power modulation

(3) Dual Frequency Gyrotron

(4) Others

# Summary of 2006-2008

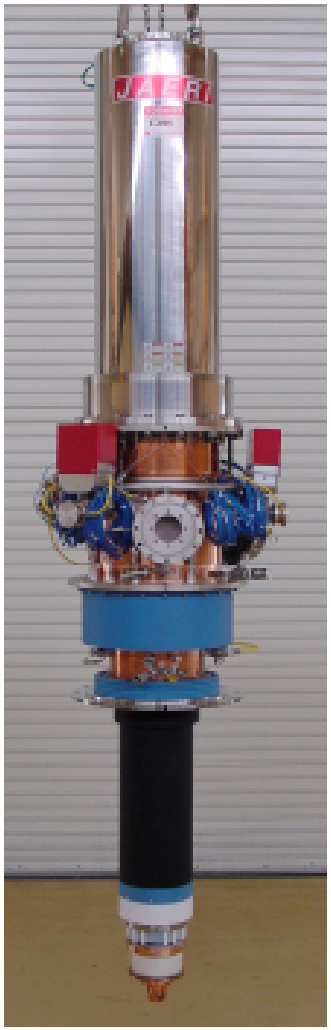

ITER-J5M2

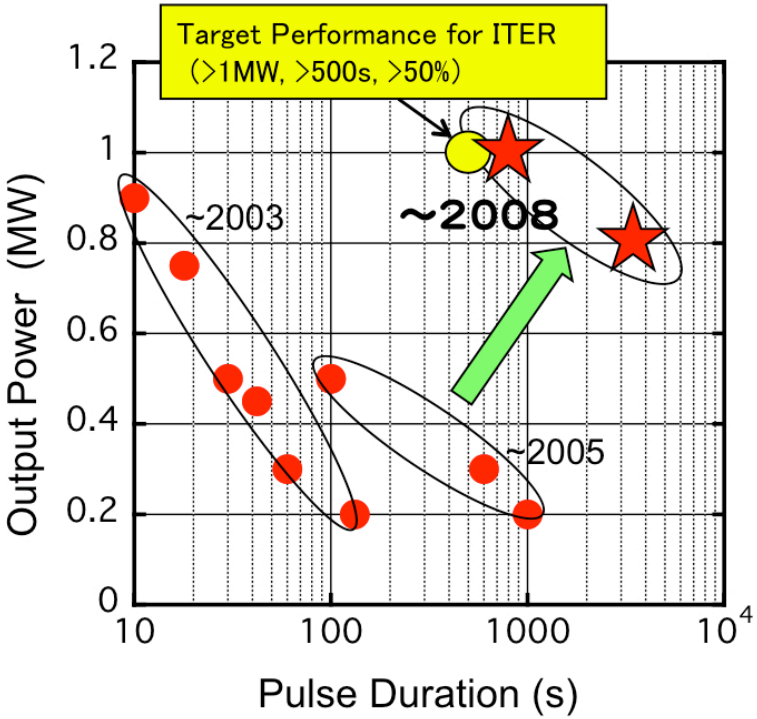


- ITER basic requirement (1MW/500s)
- Output Energy>200GJ
- Maximum Efficiency=60 % (0.6MW,CW mode)
- Repetitive operation : 0.8MW/400s (every 30min)

➡ Clear prospect for ITER application

# Next activity for ITER application

ITER-J5M2 (TE31,8 mode)

(1) Reliability test (repetitive operation)

(2) Power Modulation
for NTM suppression (~5 kHz)

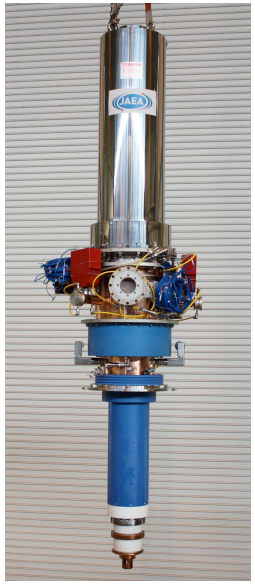

<u>High order mode gyrotron (TE31,11) with cylindrical cavity +triode MIG</u>

(3) Power increase

(4) Dual frequency operation

# Gyrotron Reliability

# (Simulation of ITER operation)

# Repetitive Operation (0.8MWx10 min)

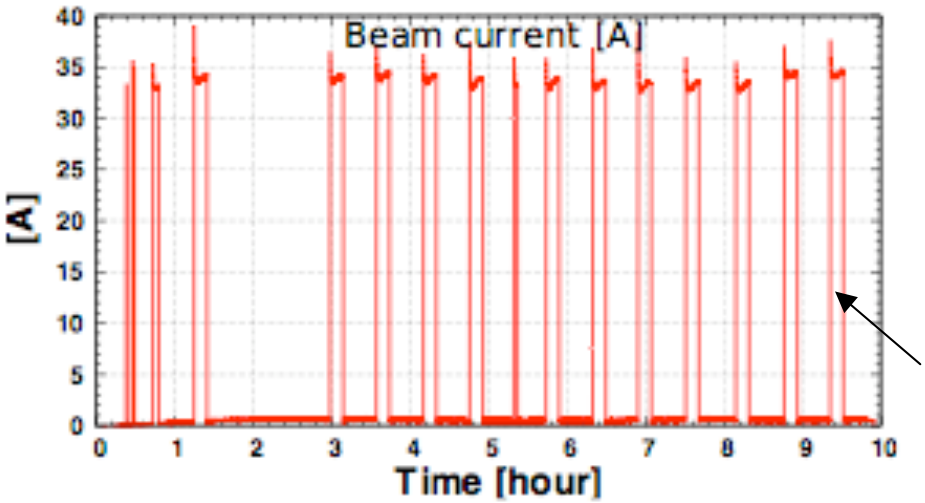


10 min. shot for every 30min.

10min shot

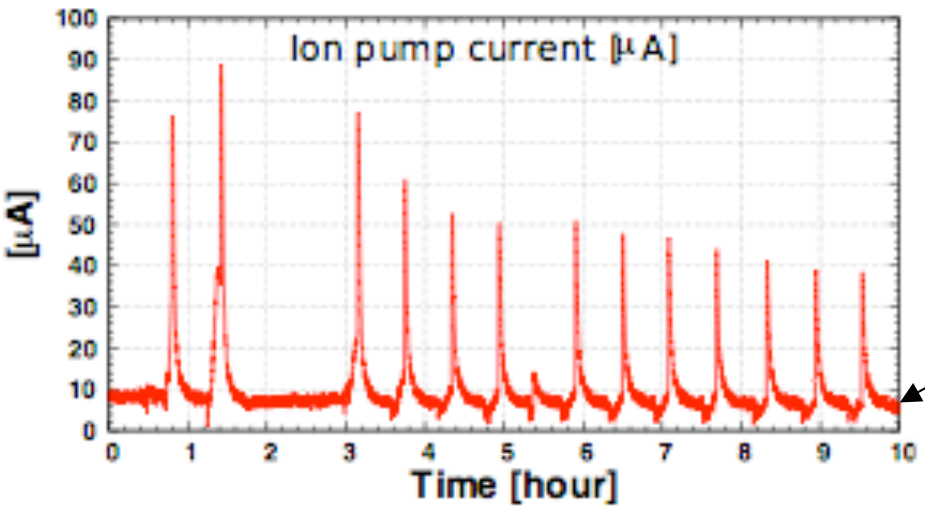


Vacuum pressure returns to original level

Base pressure ~$1 \times 10^{-5}$Pa

# Repetitive Operation

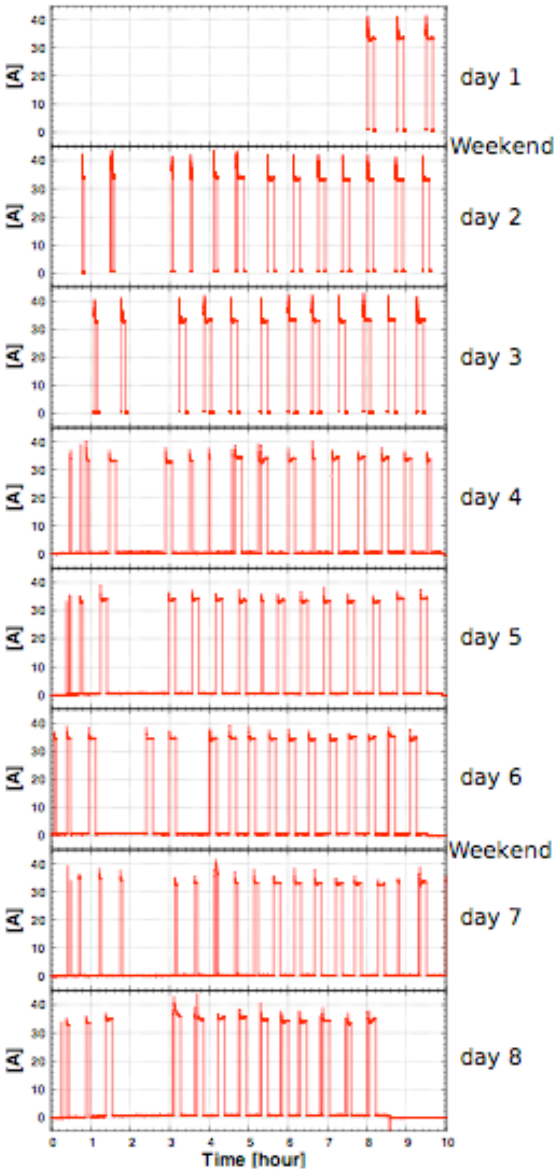


800kW/600s/every 30min/8 days

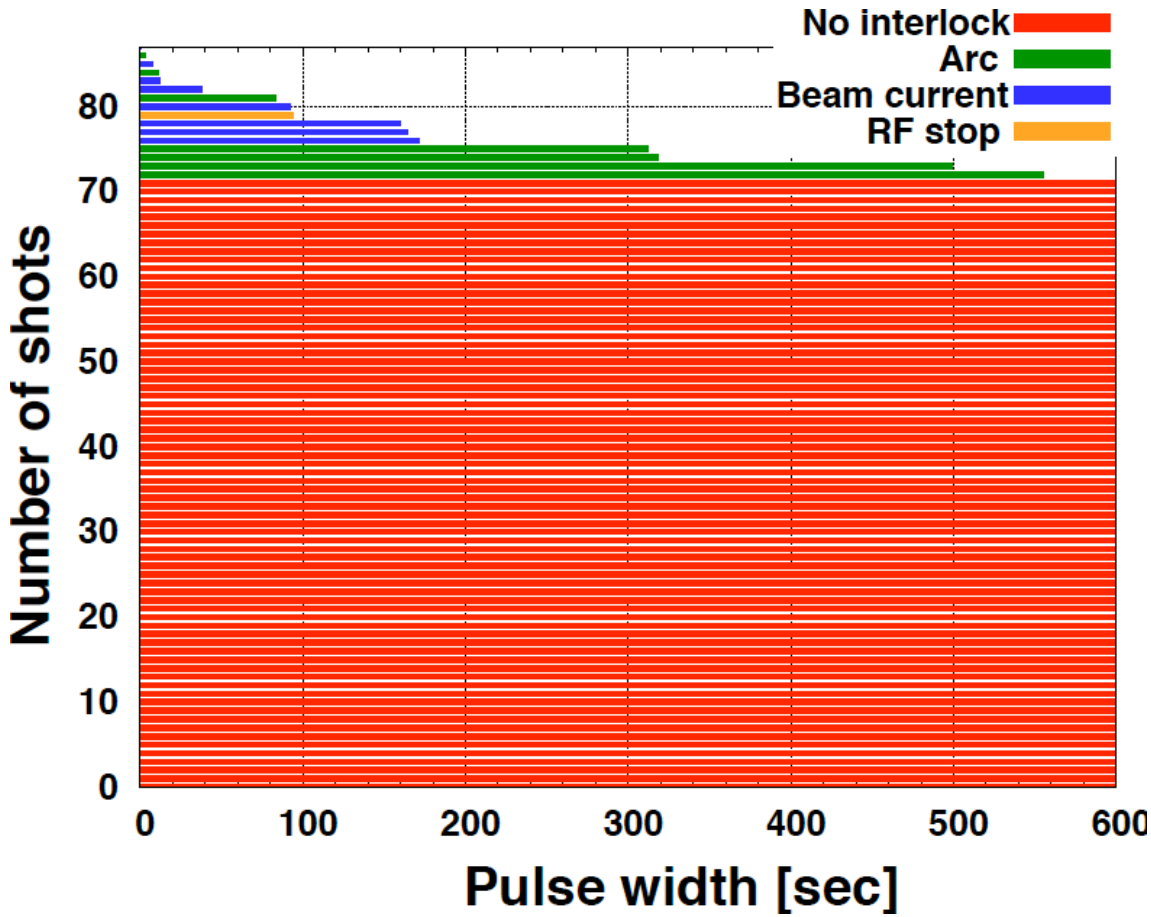


600 sec: 72 shots out of 88shots.

# On Pin hole leak

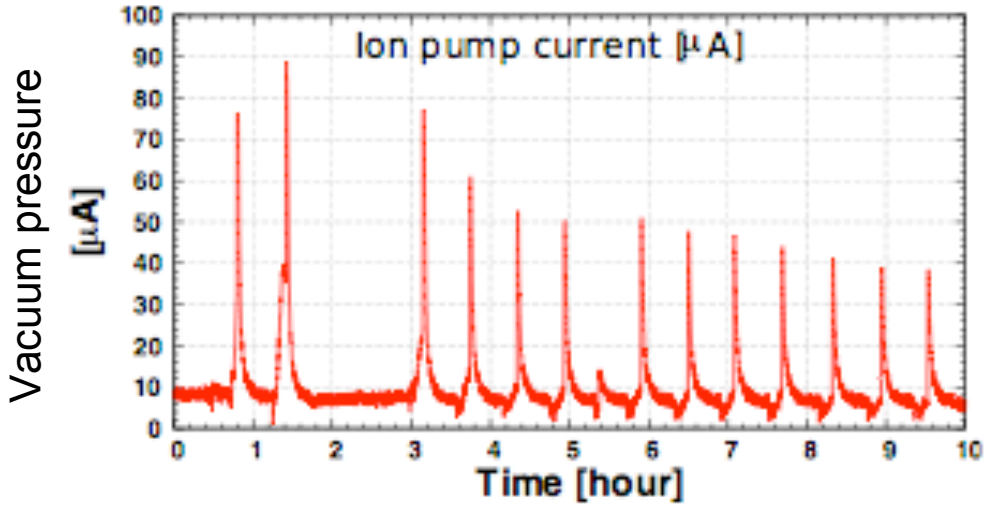


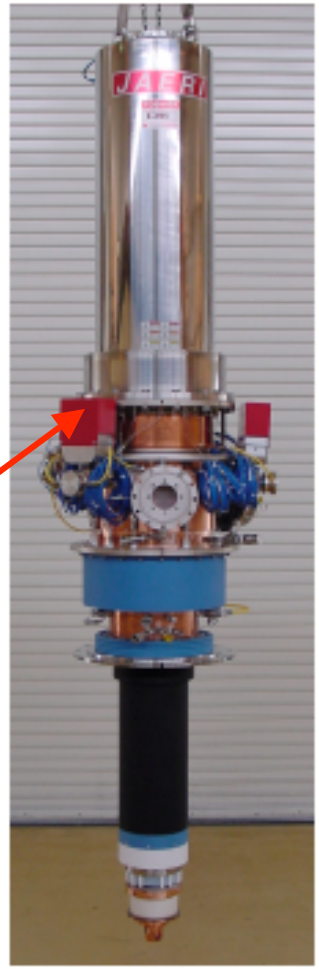

Base pressure :~1x10$^{-5}$ Pa

<u>Pin hole leak was identified after the experiment.</u>

Good performance on the bad condition.

Vacuum leak was repaired with Vacseal®

# Power Modulation for NTM suppression

# Goal of power modulation

- Demonstrate the power modulation ~5 kHz at CW-relevant operation.

- In present day experiments on Tokamak, modulation time is limited in short pulse (eg.~ 1sec) because of *collector heat load*, etc..

- For CW operation, beam current modulation is required to reduce the collector heat load.

# Power supply for power modulation

New Body Power supply (BPS) was introduced to JAEA Test Stand.
(ITER relevant BPS: 10 kHz modulation is available with 0~40kV)

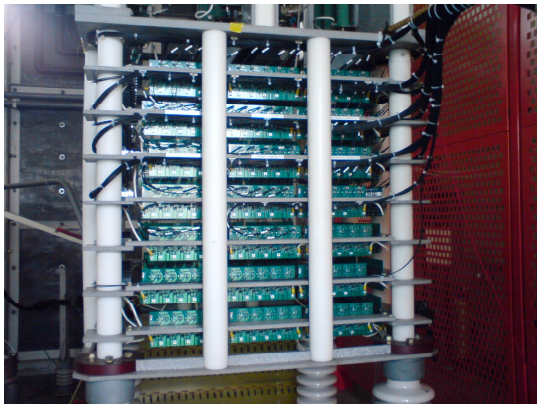

**Voltage divider for Triode**

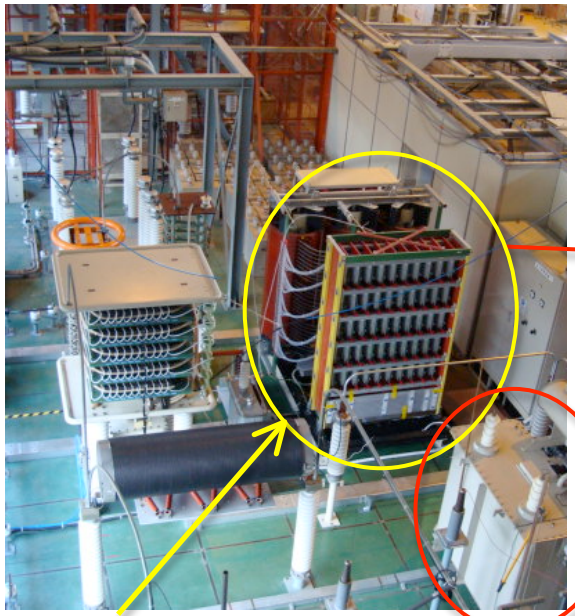

**New BPS**

Old BPS

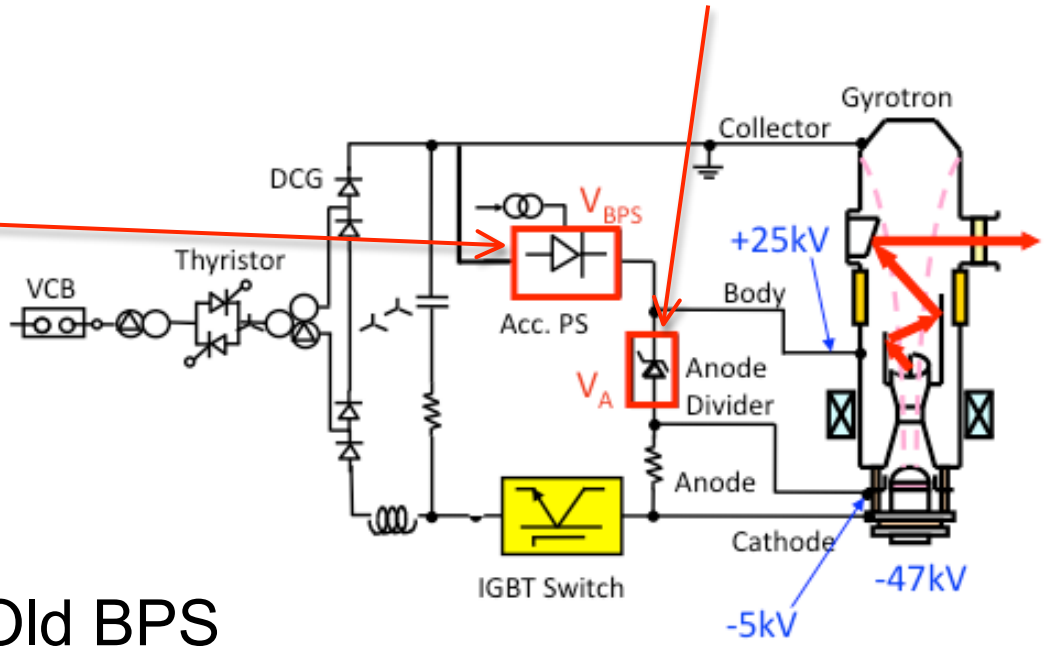

# High Frequency Beam current Modulation

Beam Current vs Anode voltage

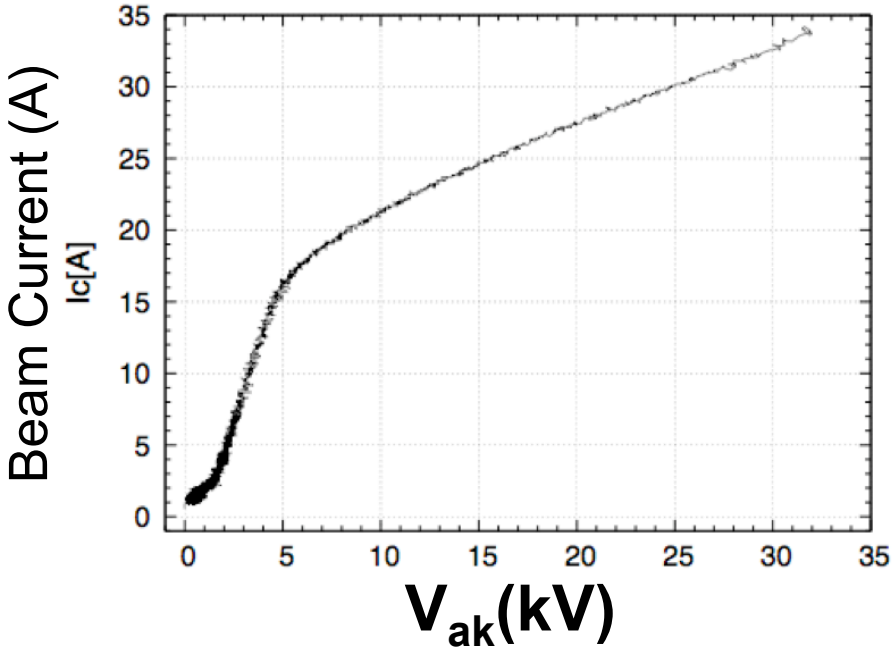


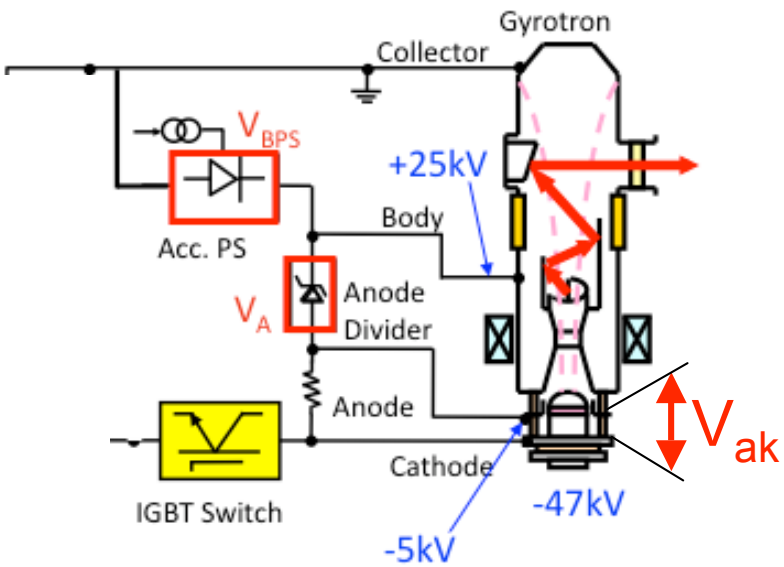


Full current modulation

Beam current modulation is available by anode modulation in Triode MIG.

➡ Minimize a collector heat load.

# Option 1 : Modulation by BPS

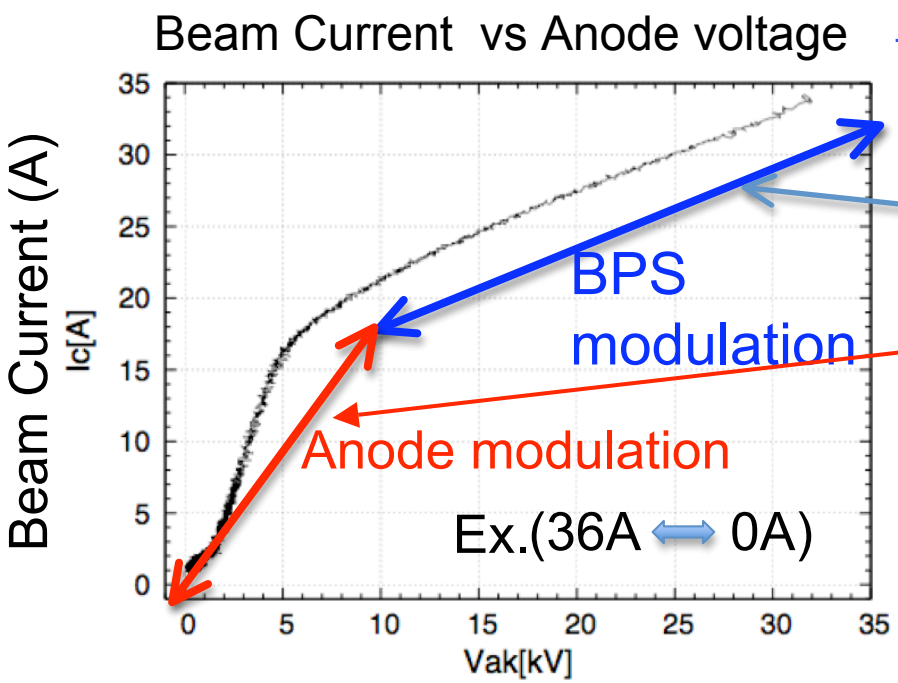


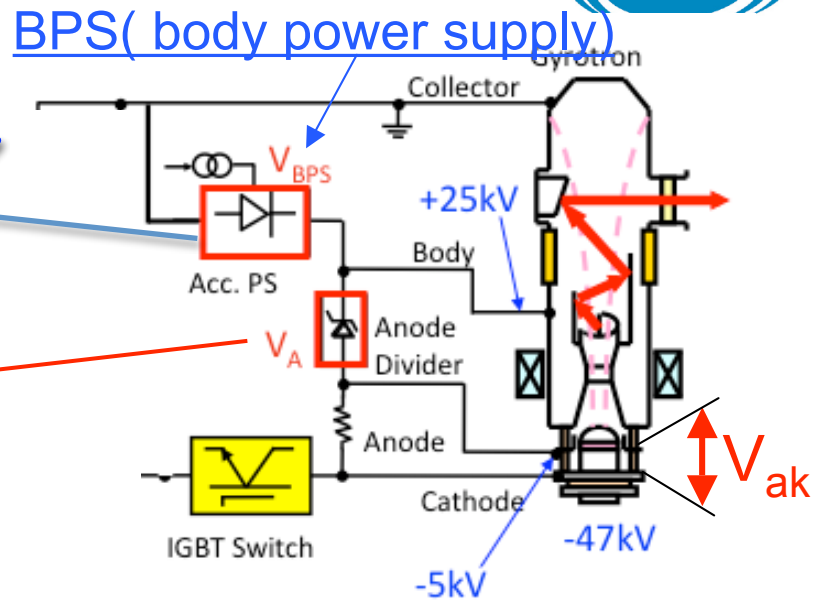


Full current modulation

| Beam current form | | Ideal Collector loss |
|---|---|---|
| $I_c$ | @ CW operation | : ~0.8 MW |
| $I_c$ | @ BPS mod. | : ~1.0 MW |
| $I_c$ | @(BPS+anode) mod. | : ~0.4 MW |

# Demonstration of CW→300Hz modulation →CW

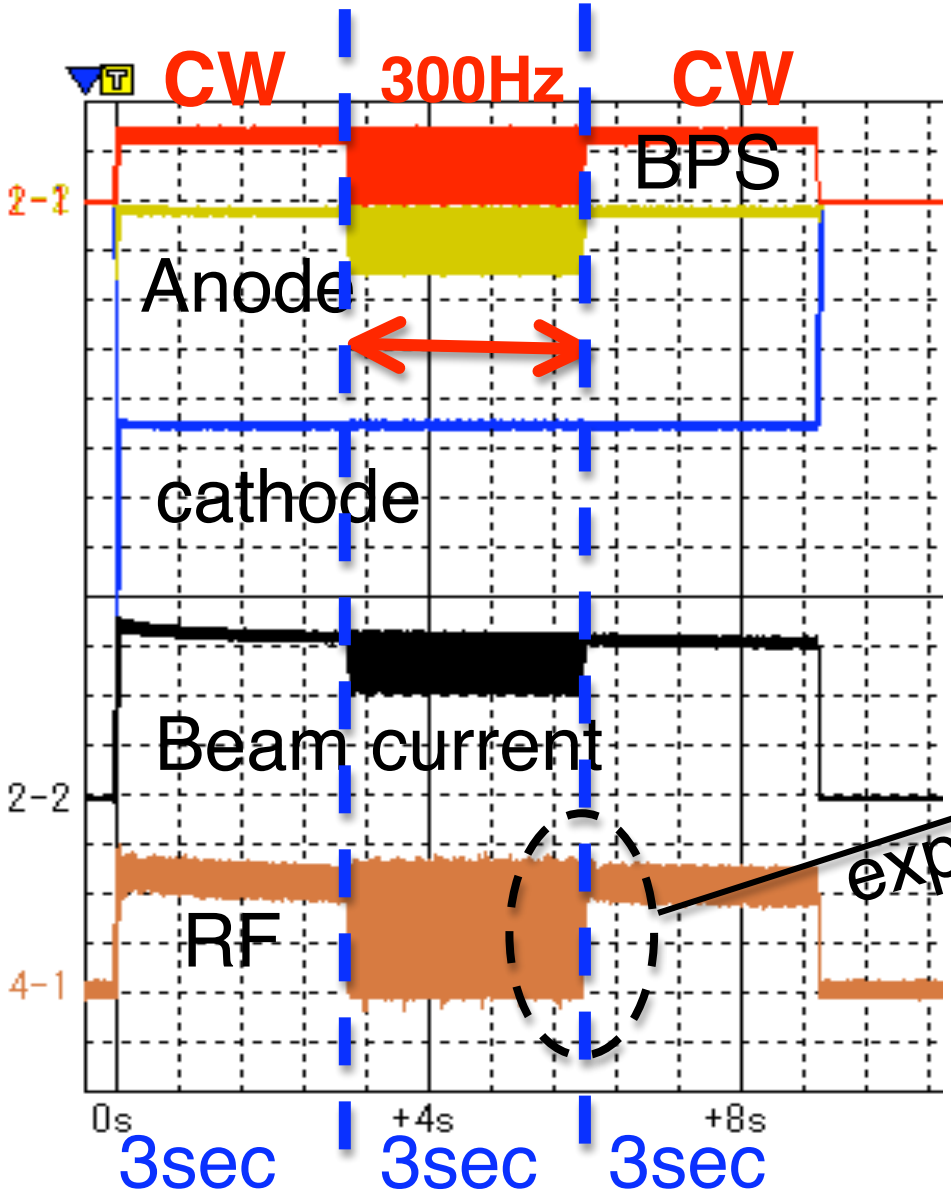


CW operation: ~606kW
300Hz modulation :ave. ~604kW
Total pulse length : ~9sec

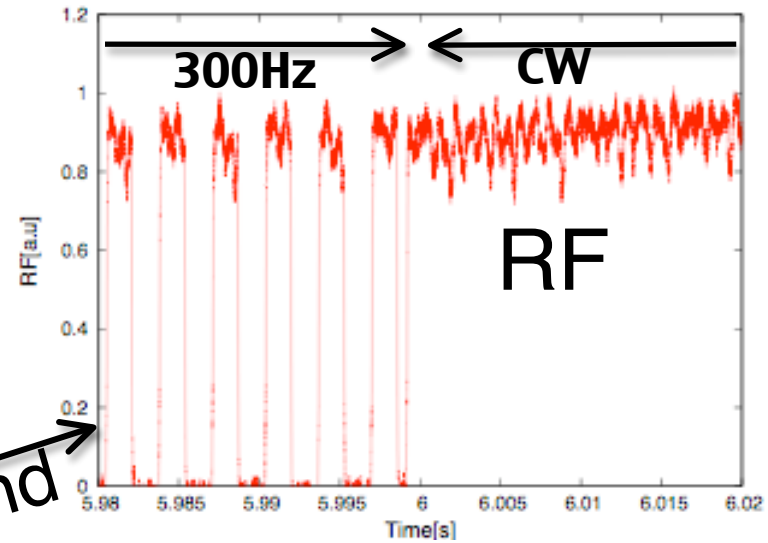

# High Frequency Modulation

5kHz Modulation (10msec)

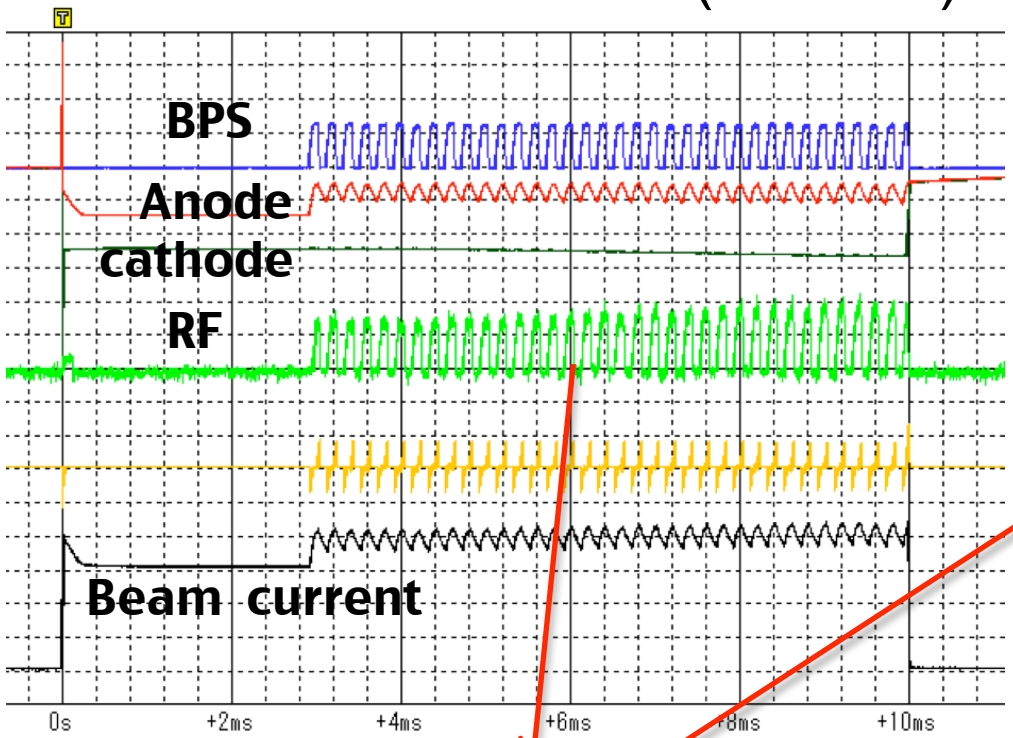


10kHz Modulation
(short pulse, expend)

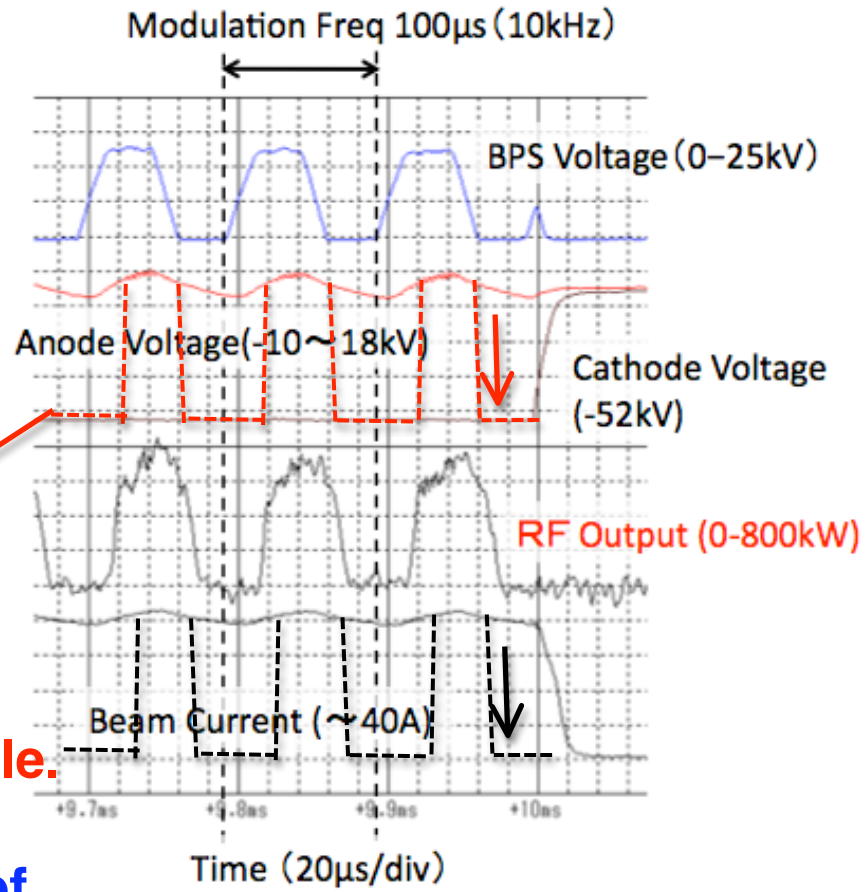


**5-10kHz RF power modulation is available.**
**Good!**

**But, current damping is small because of stray capacitance of the anode circuit. NG!**

# Option 2: Modulation by Anode Switch

For direct beam current modulation,
High freq. switch is introduced between anode and cathode.

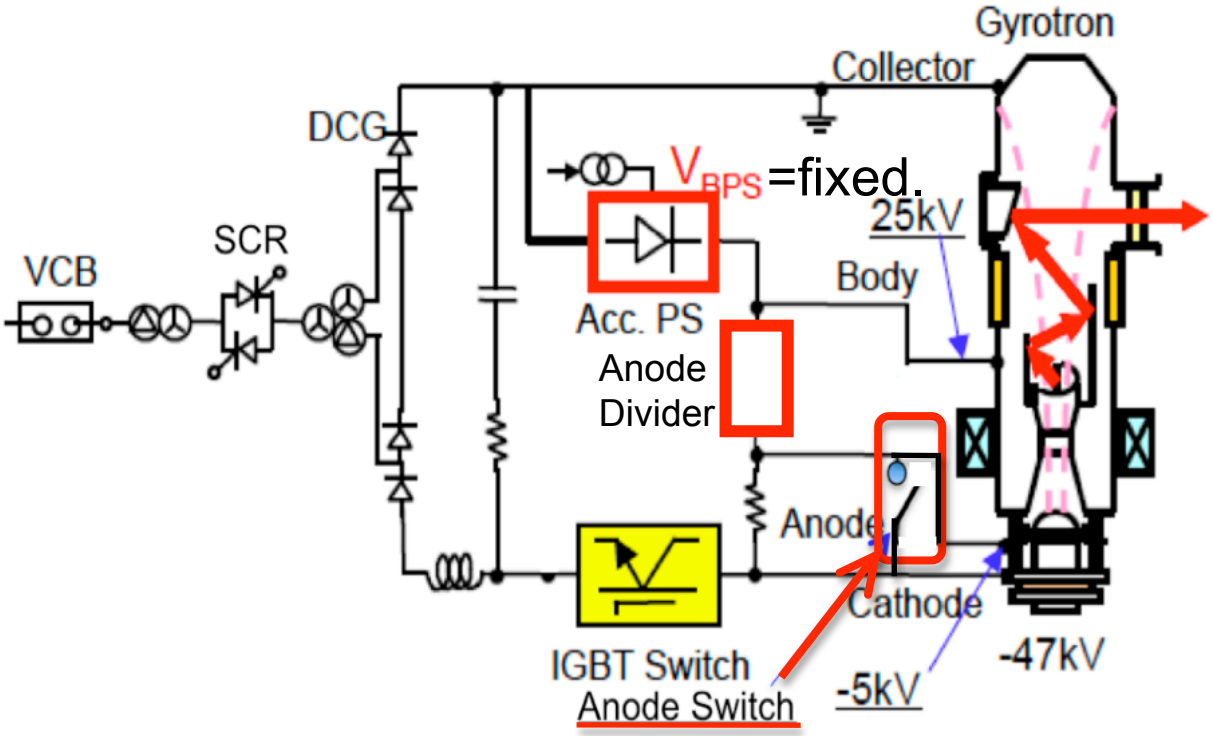

Anode switch

Short cut switch of anode voltage.
$V_{BPS}$=fixed or synchronized modulation.

# Demonstration of 5 kHz power modulation (60s)

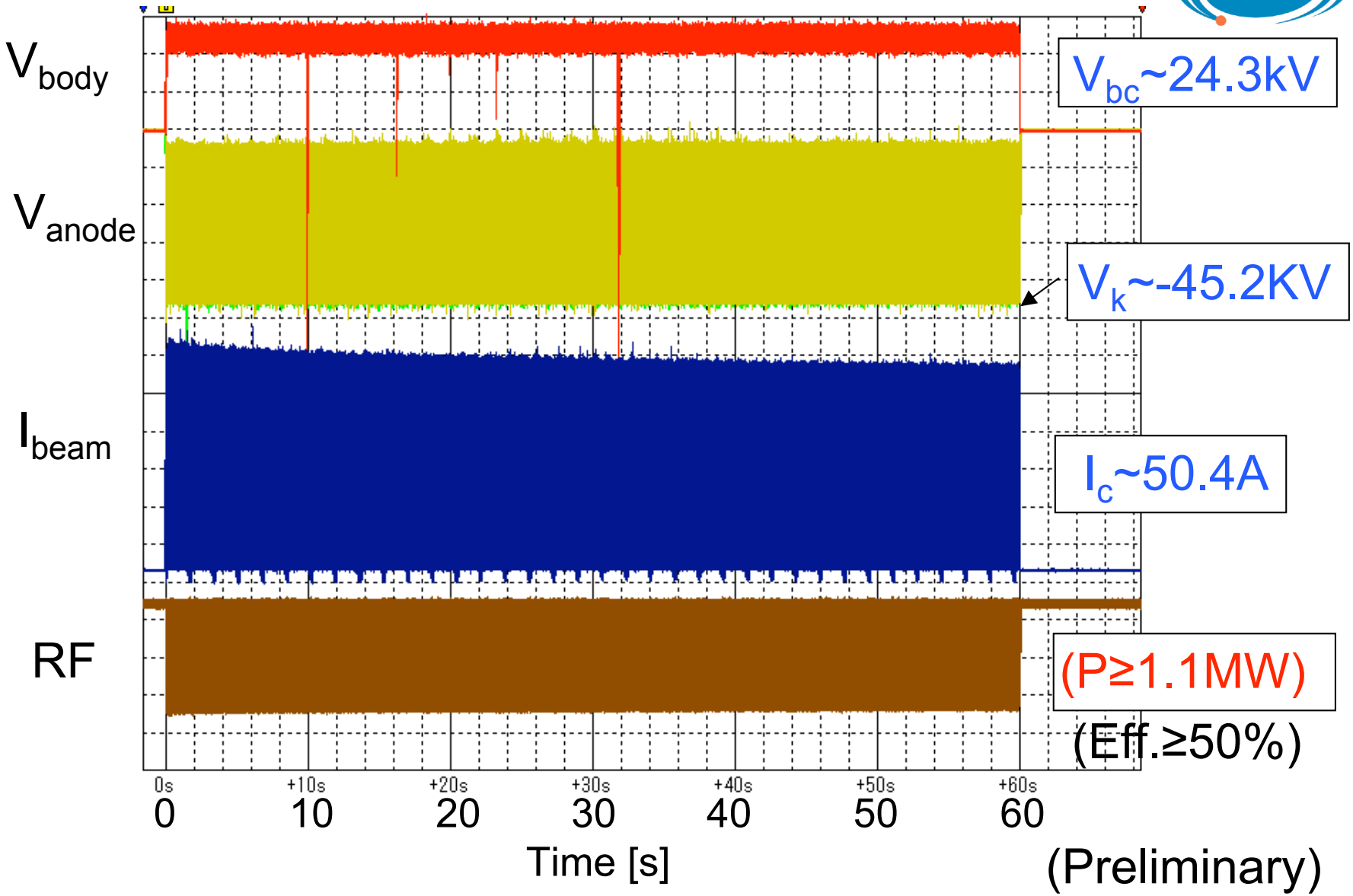


(Preliminary)

# 5 kHz power modulation

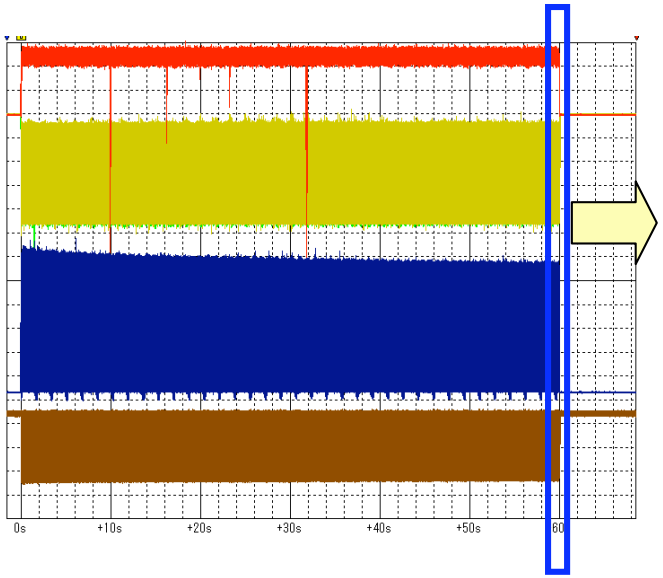


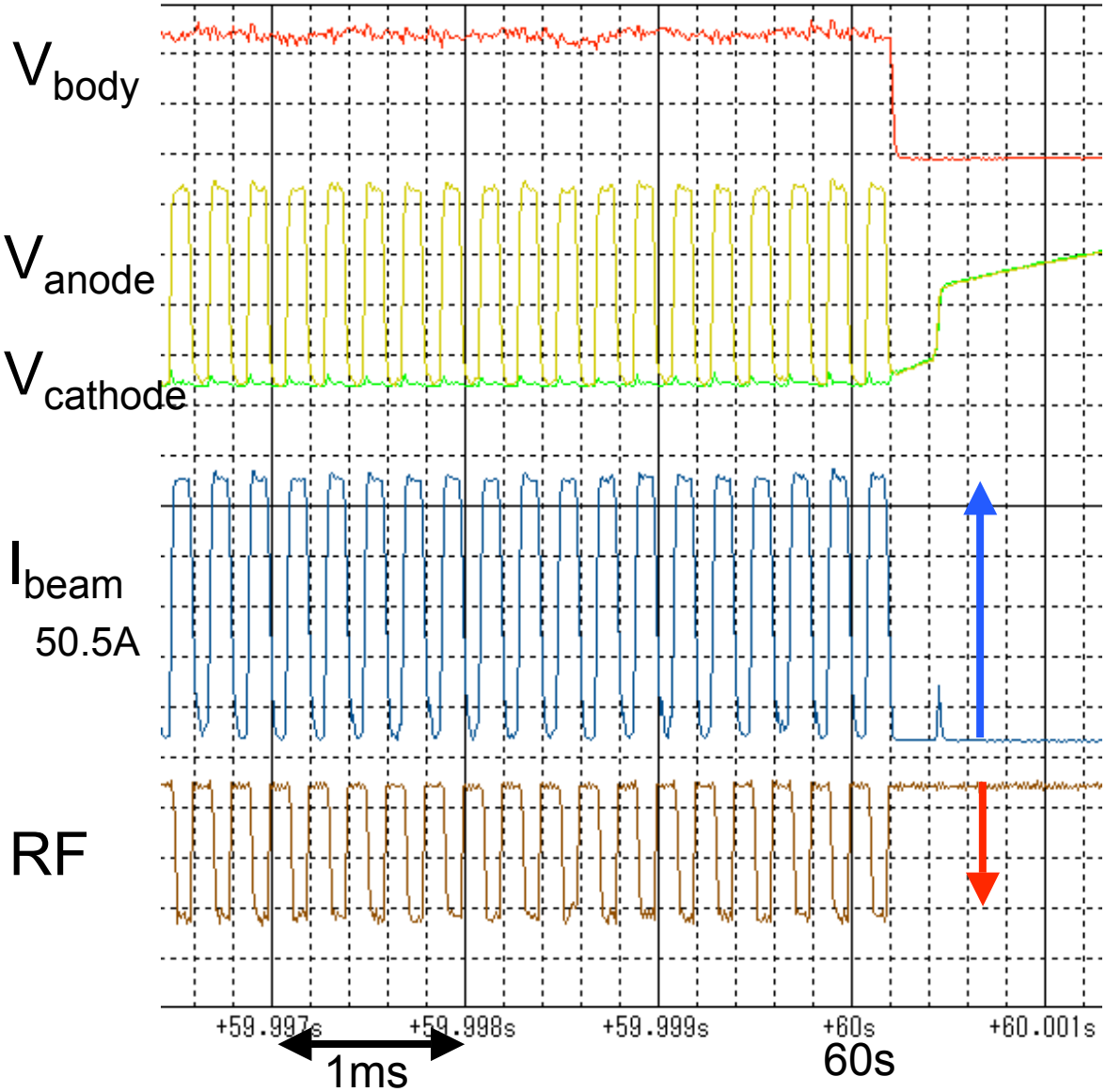


<u>ITER target</u>

1MW/1kHz/50s

⇩

(≥1.1MW)/5kHz/60s

# Modulation voltage pass @ Anode voltage modulation

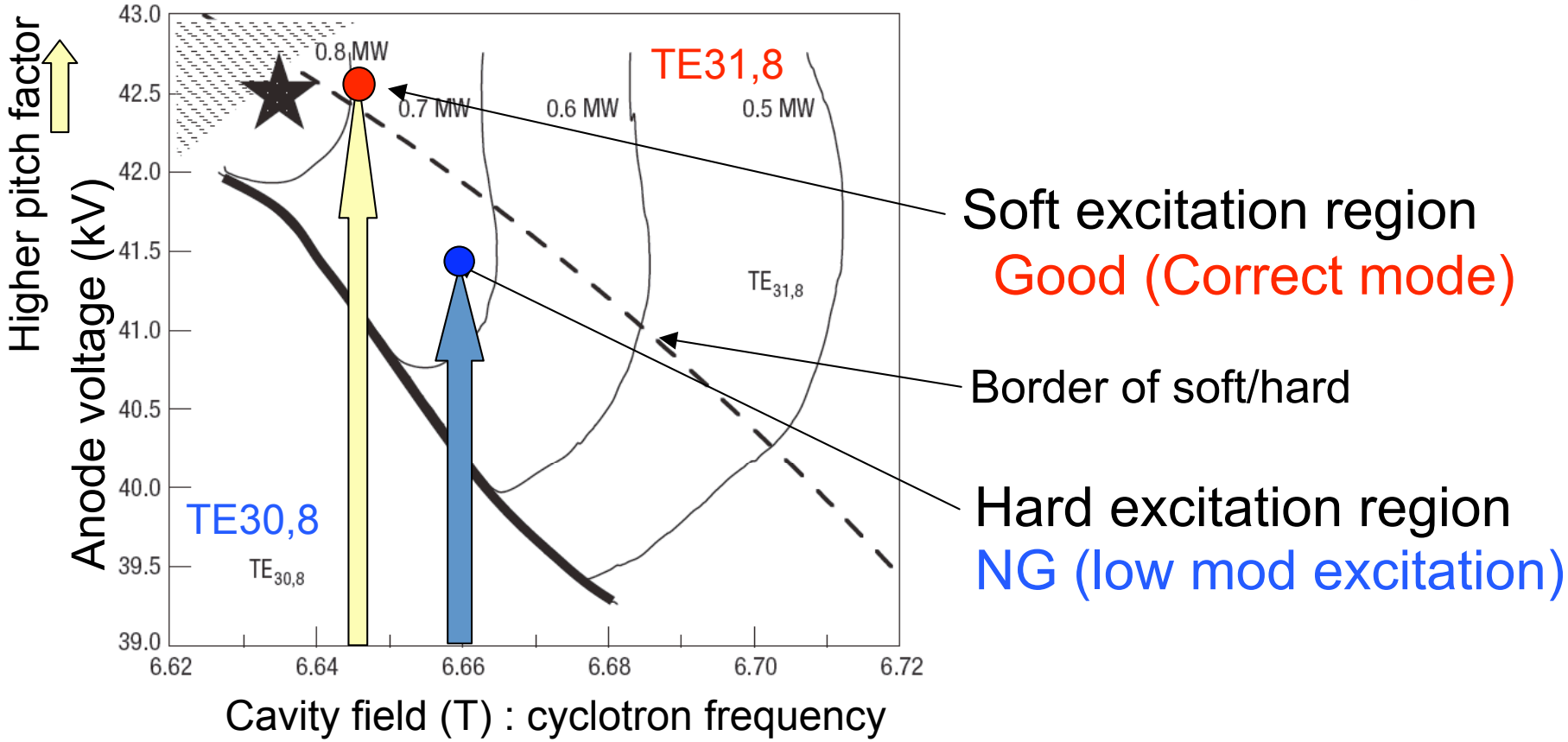


Anode voltage should be high enough
to excite target mode in soft excitation region.

# High Order Mode Gyrotron (Dual frequency)

Objective:

- Higher power (>1MW @170GHz)
- Dual Frequency

# Dual Frequency Gyrotron (Design)

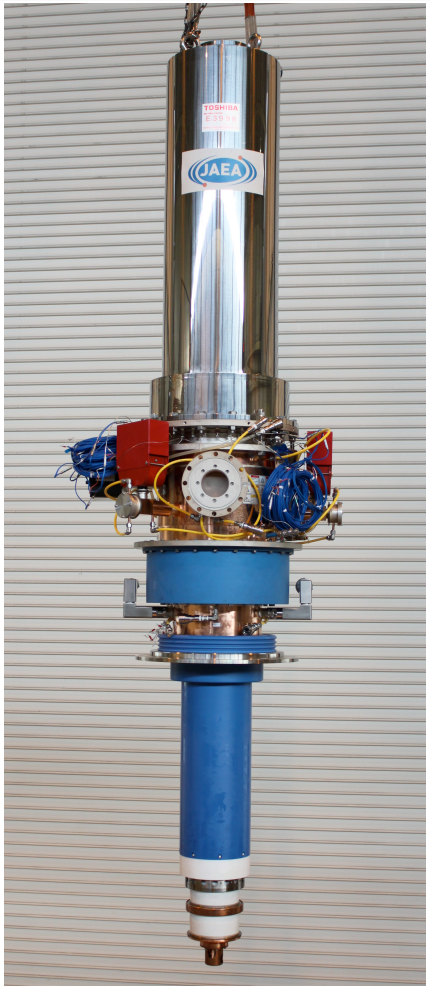

| TE31,11/170.0GHz | TE25,9/137.0GHz |
|---|---|
| $V_{beam}$=72kV | $V_{beam}$=72kV |
| I=40A | I=40A |
| B(@cav)=6.63T | B(@cav)=5.32T |
| B(@Mig)=0.28T | B(@Mig)=0.218T |
| Vak=42kV | Vak=36kV |
| $\alpha$=1.35 | $\alpha$=1.35 |
| P(@cav)~1.3MW (Hard excitation) | P(@cav)~1.26MW (Hard excitation) |

Collector, MIG, window(1.853mm), etc.
are the same design with ITER-J5M2 (TE31,8 gyrotron)

# Profile of Output RF Beam at Window

calculation

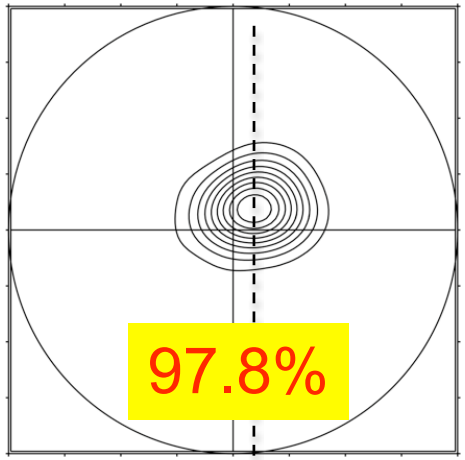


Measurement

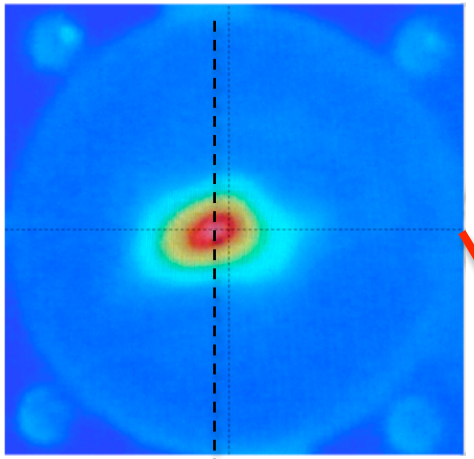

170GHz Bc=6.63T

calculation

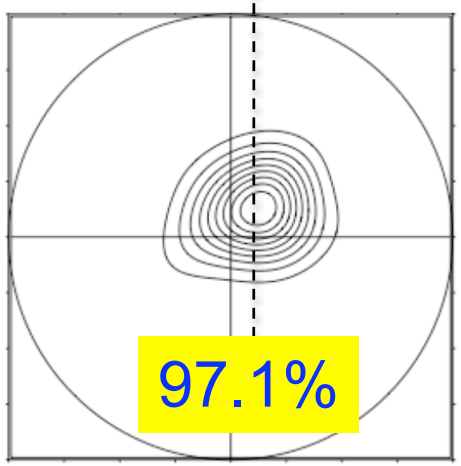


Measurement

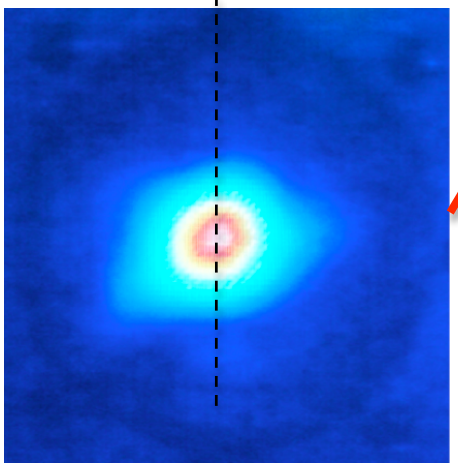

136.8GHz Bc=5.34T

**Single peaked** Gaussian-like beam
&
**Agreed well** calculation and measurement

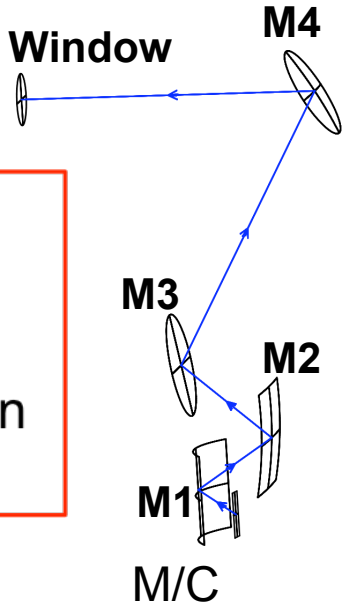


Output Beam direction is same!

# Beam Current Dependence of Power & Efficiency

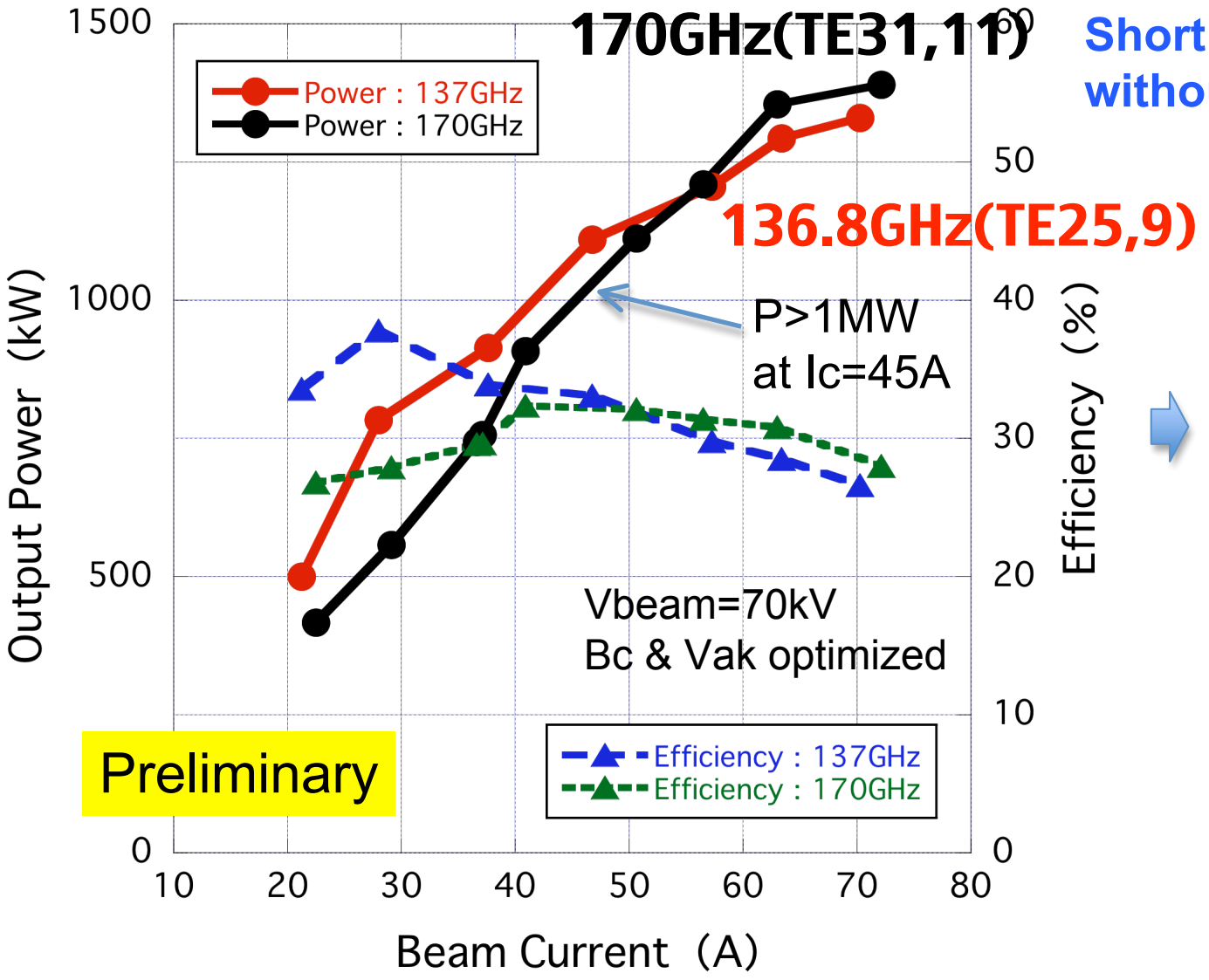


**Short pulse (<1ms), without CPD**

136.8GHz (TE25,9) has similar tendency with 170GHz (TE31,11)

Pulse extension and depressed collector operation is under experiment.

# MOU and transmission line

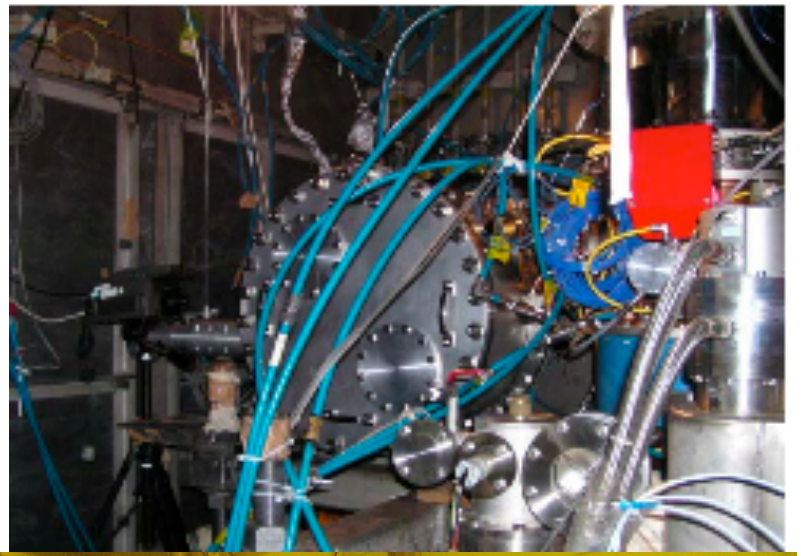

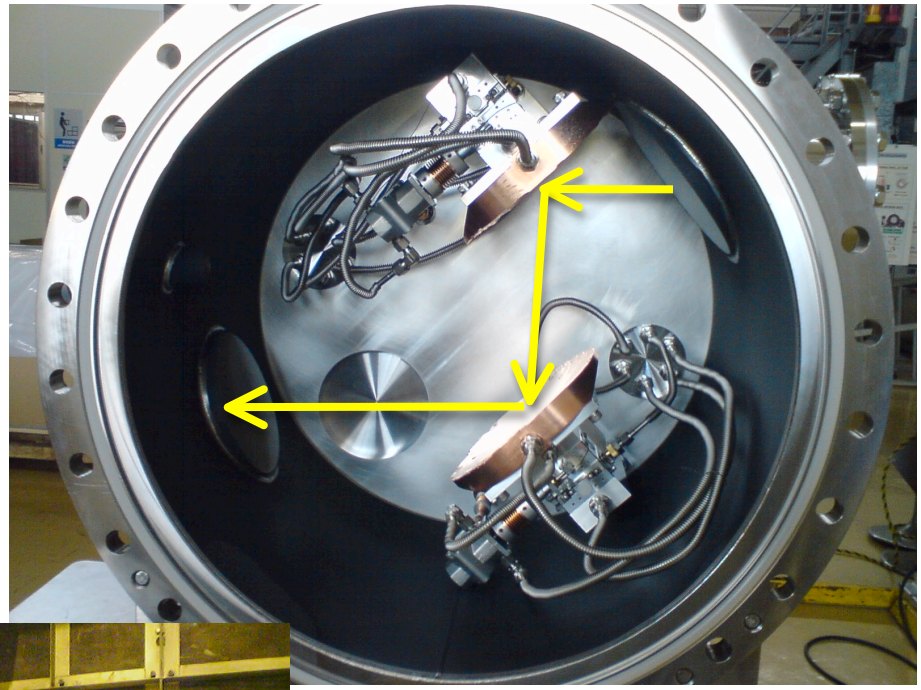

Matching Optics Unit

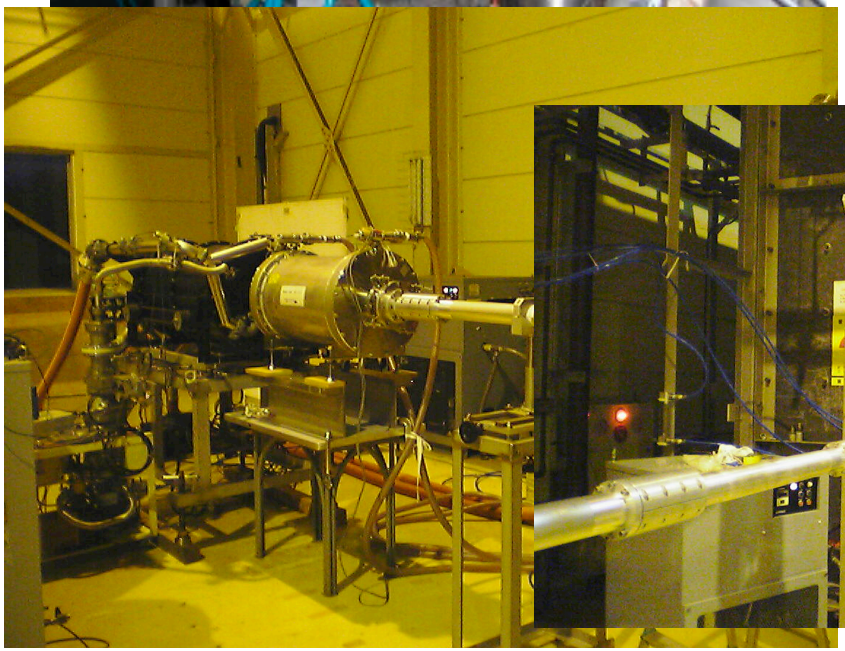

# MOU and transmission line

MOU mirrors are optimized for 170GHz,
Mirror positions, angles are fixed for
Both frequencies.

| | 136.7 GHz | 170GHz |
|---|---|---|
| Center offset X at 10cm | 1.9 mm | 1.1 mm |
| Center offset Y at 10cm | 0.8 mm | -1.4 mm |
| Tilt angle X | 0.22 deg | 0.09 deg |
| Tilt angle Y | 0.15 deg | 0.20 deg |
| **HE11 mode** | **94.2 %** | **93.2 %** |
| LP11(e) mode | 1.0 % | 4.0 % |
| LP11(o) mode | 1.6 % | 0.4 % |
| MOU power loss percentage | 9.8 % | 6.8 % |

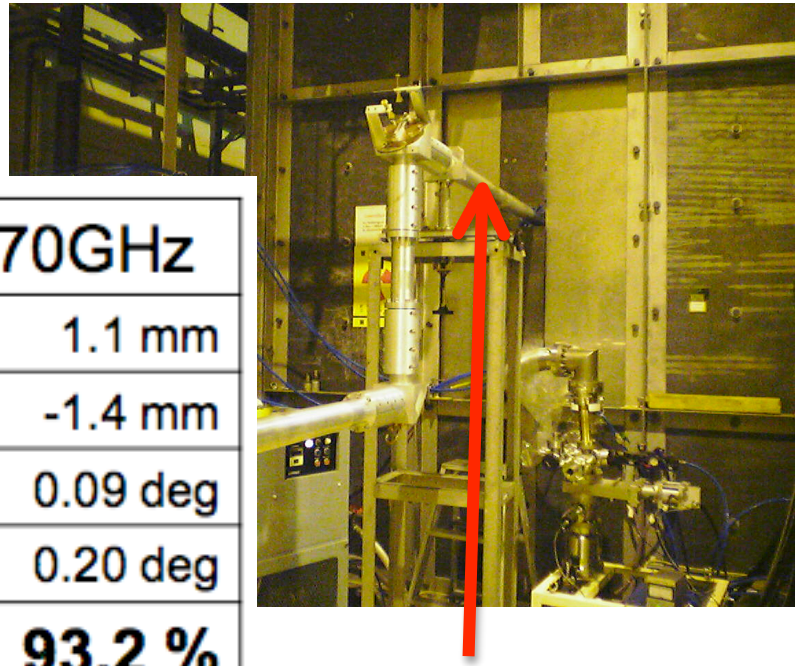

Measured point

>90% output power couples with waveguide.

# Long Pulse Operation

Under pulse extension

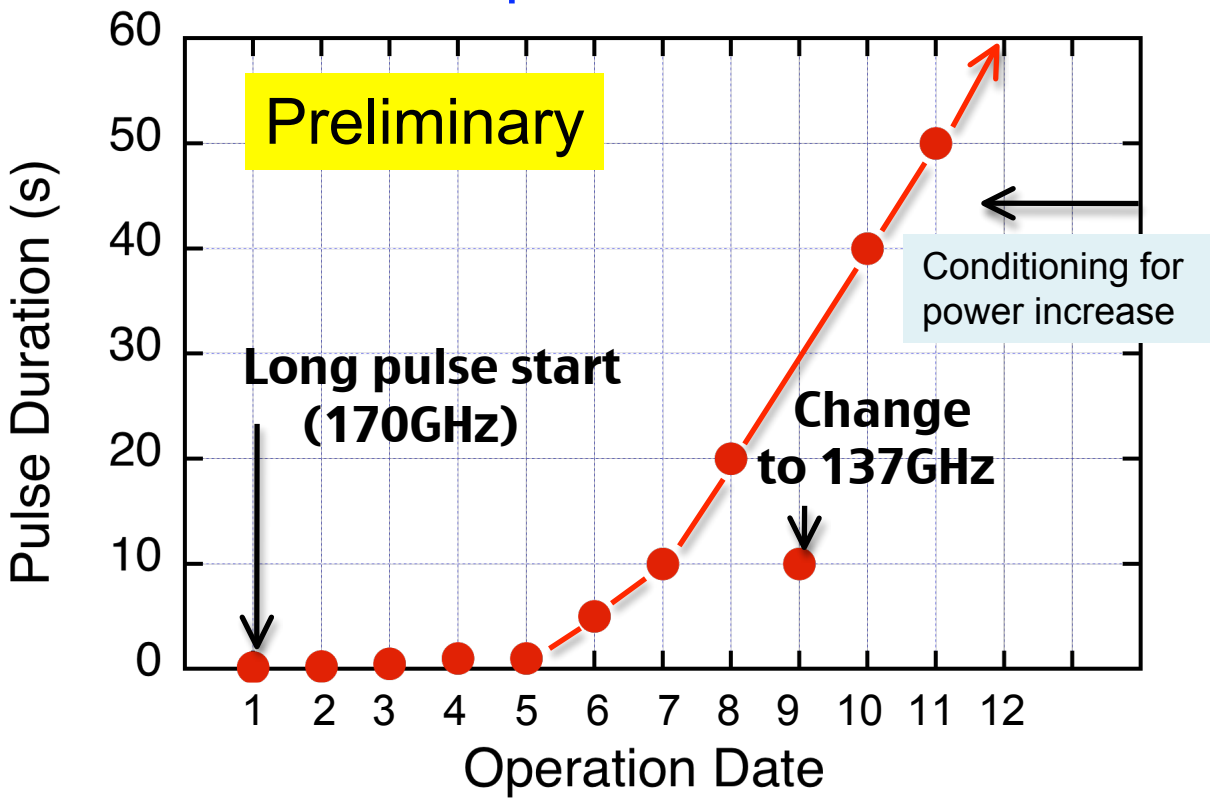


Power ~550kW
(Beam Curr. ~33A)

・Smooth pulse extension both at 170GHz and 137GHz

# Others

- Gyrotron on JT-60U
- Collaborations

# 1.5MW 4 s oscillation on 110 GHz JT-60U gyrotron

Construction : 1998
Full operation : 2001~2008
First Plasma of JT-60SA : 2016

4 high power triode gyrotrons
4 transmission lines ($HE_{11}$ mode)
2 antennas (beam scan in 1 or 2 directions)

Injected RF energy
10 MJ (2.8 MW x 3.6 s) by 2002
14.5 MJ (2.9 MW x 5.0 s) by 2008

Long Pulse Operation
30 s (0.35 MW) with 1 gyrotron by 2007
45 s (0.35 MW) with 3 gyrotrons by 2004

## Gyrotron test for JT-60SA

1.5MW/4sec

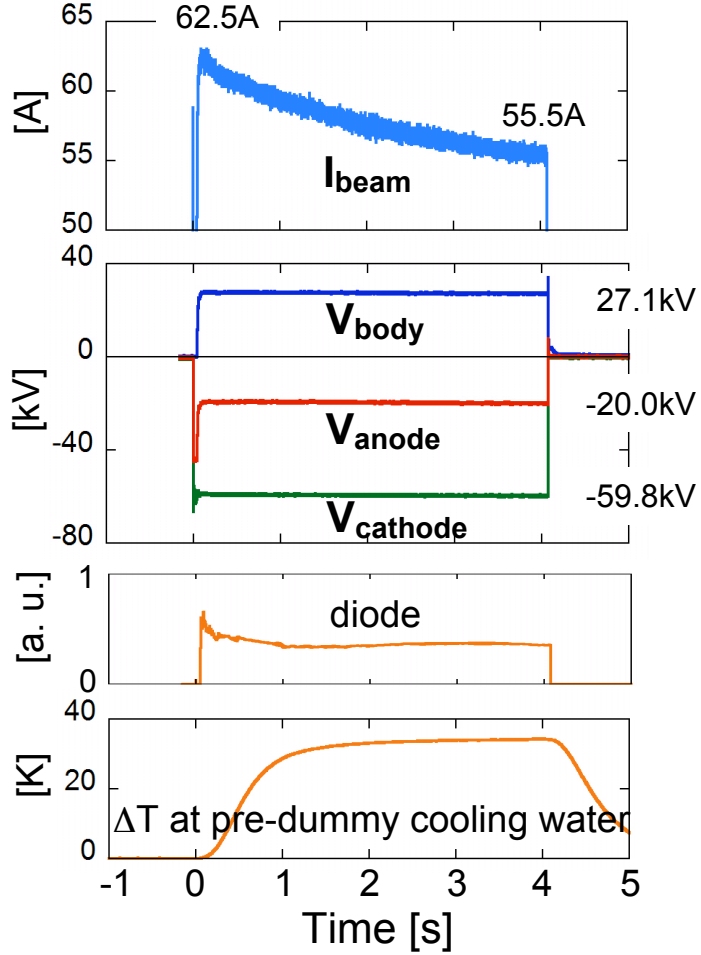

# View of Component Test at High Power (US-J collab.)

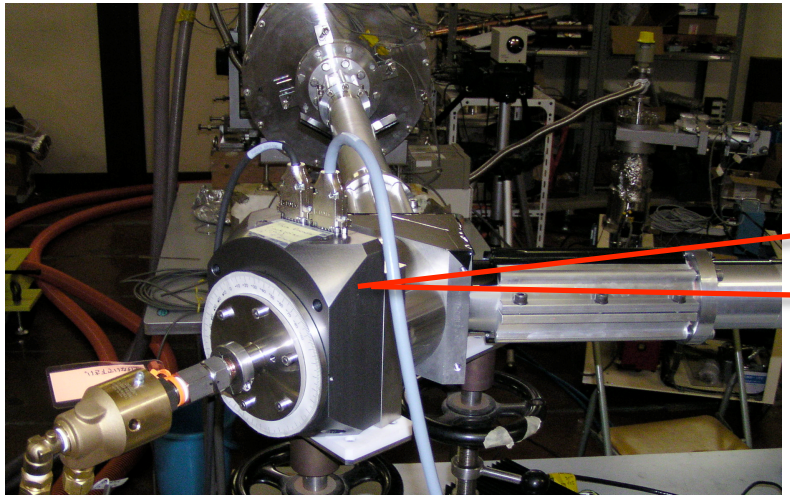

Polarizer

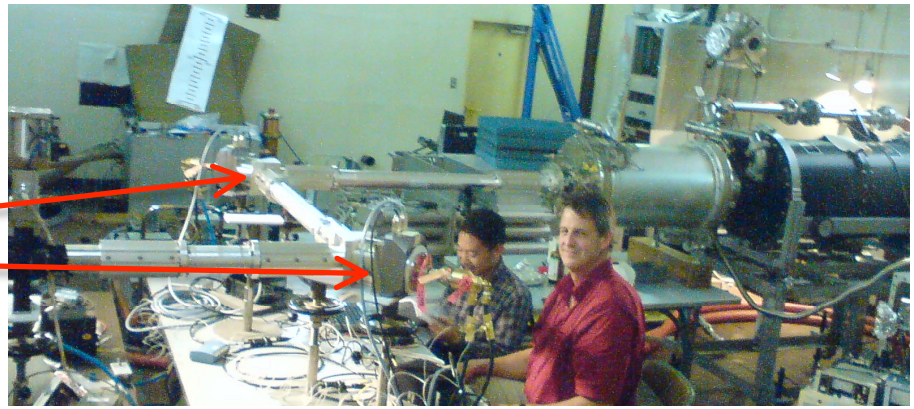

Low loss miter bend

R.A.Olstad, et al.

# Torus window for ITER (EU-JA Collaboration)

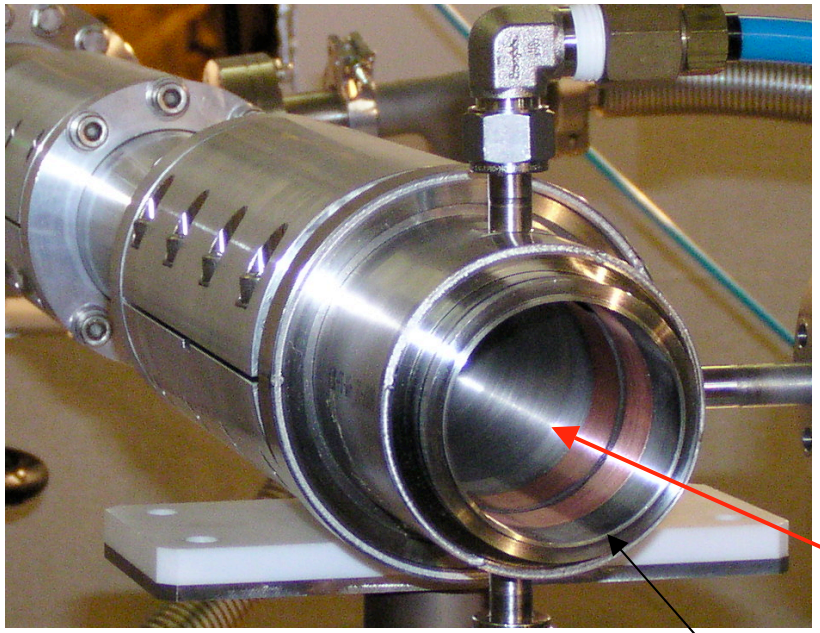

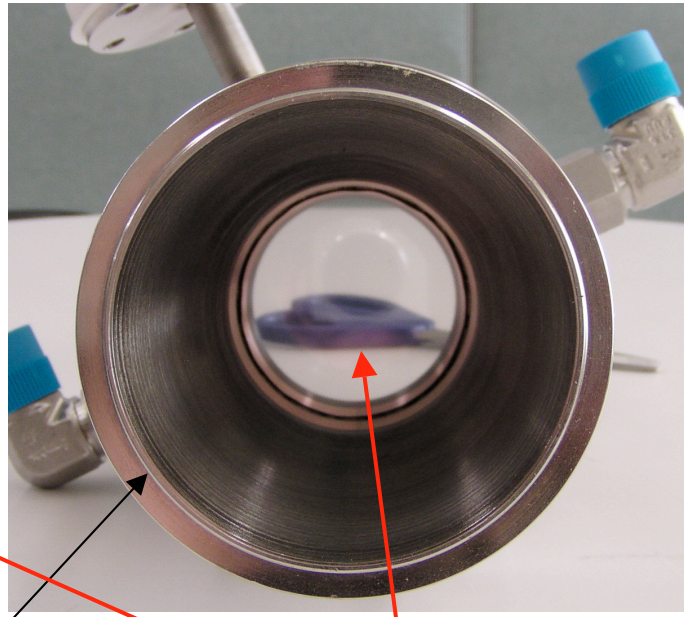

Waveguide

Diamond window
1.12mm

KIT (T.Scherer, et al.)

# Gyrotron power is used for Launcher development

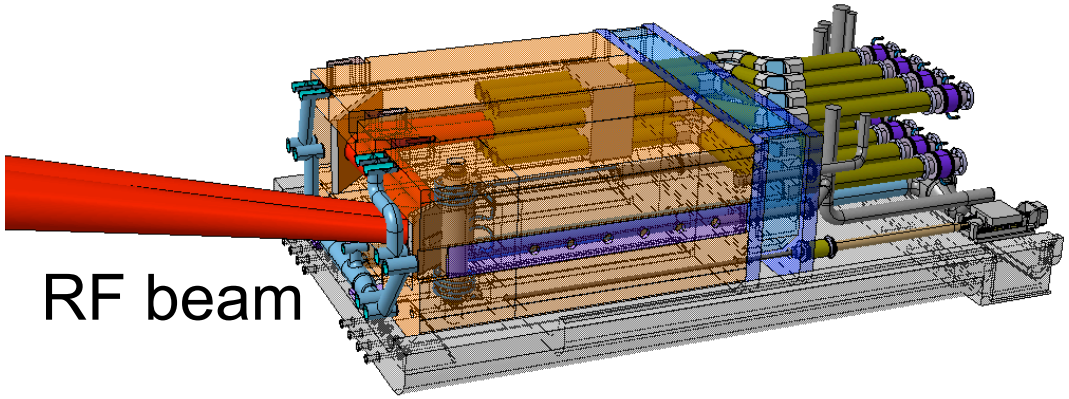


Launcher mock-up
(one column)

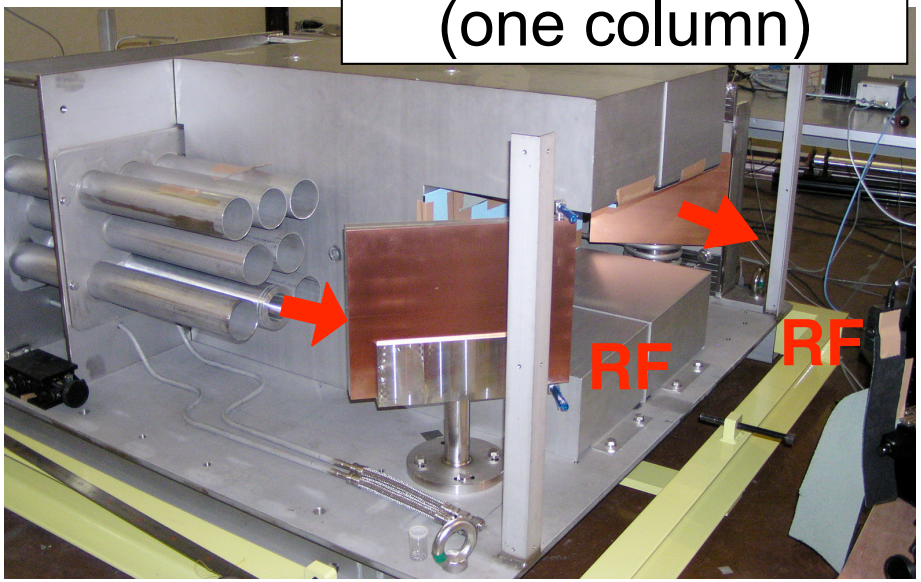


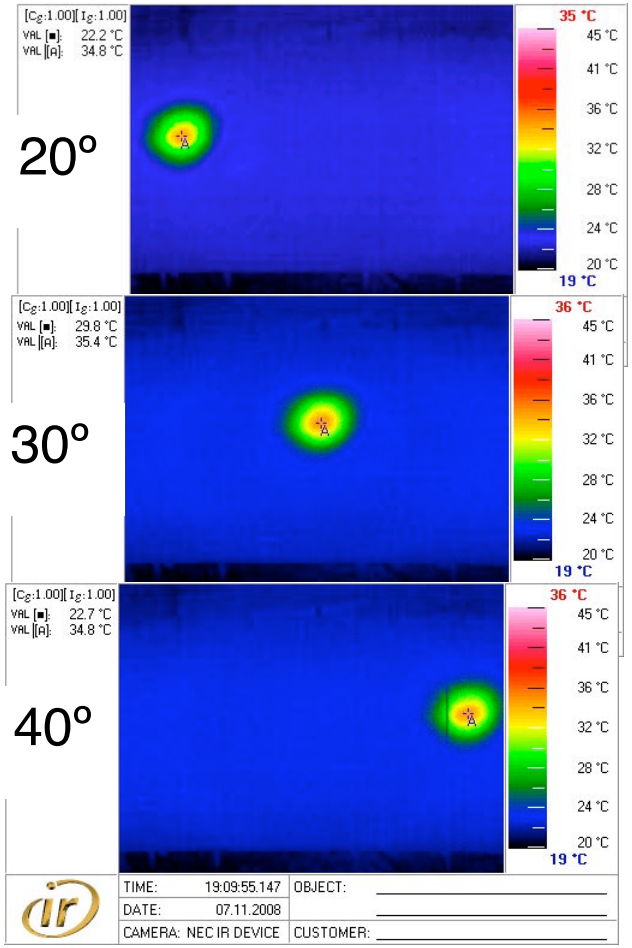


High Power Radiation
on the screen

# Summary

## (1) Repetitive Operation for ITER simulation

- 0.8MWx10 min for every 30 min.
  72 shots/88 shots

## (2) High Frequency Power modulation

- 5kHz power modulation by full current modulation for 1 min.

## (3) Higher Order Mode / Dual Frequency Gyrotron

- Dual frequency gyrotron of TE31,11/170GHz and TE25,9/136.8Ghz was fabricated and tested.
  High efficiency with >1MW oscillation was demonstrated at both frequency.

## (4) 110GHz Gyrotron

- 1.5MWx4sec demonstrated.