FIR Tangential Interferometer/Polarimeter Diagnostic for NSTX-U

C.W. Domier, R. Barchfeld, C.M. Muscatello, N.C. Luhmann, Jr., *University of California at Davis*
R. Kaita, Y. Ren, *Princeton Plasma Physics Laboratory*

D.M.R.C Davis MM-Wave Research Center

PPPL PRINCETON PLASMA PHYSICS LABORATORY

Abstract

The addition of a 2nd neutral beam injector on NSTX during the current shut-down period necessitates reconfiguration of the far-infrared tangential interferometer/polarimeter (FIReTIP) system. During this shut-down period, the laser systems have been returned to UC Davis for laboratory characterization and upgrade. FIReTIP will be reconfigured as a 3-channel system, employed for core density monitoring/feedback control as well as core/edge fluctuation measurements. Besides the spatial rearrangement of the laser system, optics, and electronics, a significant upgrade to FIReTIP involves modification of its constituent Stark laser, in particular, the shape of its waveguide and electrodes. With the new design, simulations indicate improved mode quality and power output which directly translates to improved FIReTIP signal-to-noise ratios.

*This work is supported by U.S. Department of Energy Grant Nos. DE-FG02-99ER54518 and DE-AC02-09CH11466.

NSTX-U Device Being Upgraded for Higher Performance

Requires facility / infrastructure enhancements

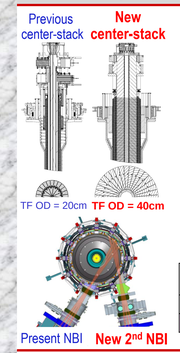

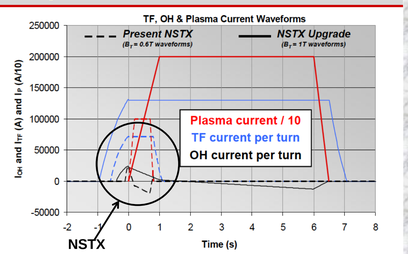

	R_0 (m)	A_{min}	I_p (MA)	B_T (T)	T_{TF} (s)	R_{CS} (m)	R_{OB} (m)	OH flux (Wb)
NSTX	0.854	1.28	1	0.55	1	0.185	1.574	0.75
NSTX-U	0.934	1.5	2	1	6.5	0.315	1.574	2.1

The FIReTIP System (Before Upgrade)

- **F**ar **I**nfra**R**ed **T**angential **I**nterferometer/ **P**olarimeter system installed on NSTX
- FIR wavelength of 119 μm (2.5 THz)
- Channels #1 and #2 used as density monitors
- Channels #3, #4 and #5 monitor core fluctuations
- Channels #5 and #7 monitor edge fluctuations

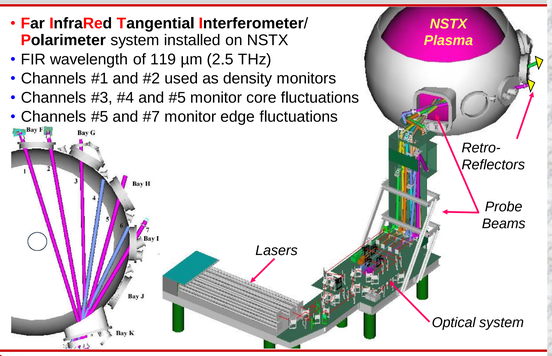

The FIReTIP System (Before Upgrade)

- FIReTIP lasers, optics, mixers and detection electronics were previously located on the NSTX test cell floor
- FIReTIP beams were optically transported up to the entrance windows, propagated through the NSTX plasma, and then returned back down to the mixers and detection electronics

FIReTIP Reconfiguration Plans

- The beamline for the 2nd NBI source will occupy much of Bay K, which was the entrance port for all 6 FIReTIP beams. Additional NBI armor required for use with this source will also obstruct some of the exit ports employed by FIReTIP. These changes require the diagnostic to be dramatically reconfigured for use on NSTX-U.
- A three channel FIReTIP system is envisaged for NSTX-U: one density monitor channel (#1) in FY14, one core fluctuation channel (#2) in FY16, and one edge fluctuation channel (#3) in FY15.
  - Beamlines for #1 and #3 have been laid out
  - Beamline #2 is still under discussion.
- FIR lasers will be relocated out of the NSTX-U test cell into a "cage" area just outside the NSTX-U test cell, due to lack of suitable floor space with addition of the 2nd NBI source. Dielectric waveguides will be employed to couple FIR beams to NSTX-U.
- FIReTIP optics, mixers and detectors will be placed near the NSTX-U vacuum vessel in a location not yet determined

FIReTIP Beamline #1

- FIReTIP beamline #1 will use sight line 1 as shown to the right (5 possible sight lines shown).
- This employs an internally-mounted retro-reflector tucked away in the spool piece of Bay B, which shields the retro-reflector somewhat from Li vapor spewed from the evaporators.
- The retro-reflector will be welded to the inside of the Bay B port cover.
- Channel #1 will have two primary uses: to calibrate the Thomson scattering system, and for real-time density feedback control.

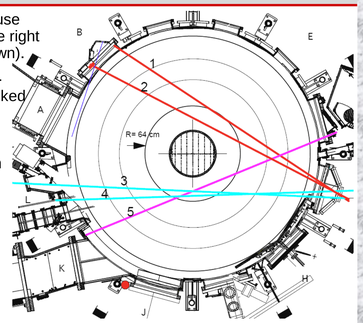

FIReTIP Beamline #3

- FIReTIP beamline #3 will use the sight line in **red** as shown to the right.
- This employs an entrance window on Bay L that has already been designed into the Bay L port cover.
- An externally-mounted retro-reflector attached to Bay I will reflect the beam back.
- This channel will monitor density fluctuations in the plasma edge, such as those associated with the important pedestal region.

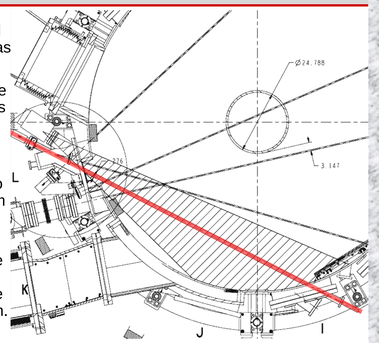

Visible Light Compensation System

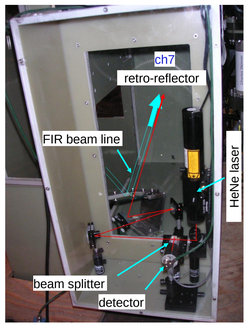

- Ch7 (R_T=150 cm) of the previous FIReTIP system had a 40x smaller signal to noise ratio than other channels due to a short beam path and low density (edge plasma), and employed a homodyne HeNe laser interferometer (see left) for vibration compensation.
- The homodyne system configuration is being replaced with a heterodyne system,employing a 40 MHZ acousto-optic modulator (AOM-405AF1).
- The heterodyne system will be installed on Ch #1 to reduce the effect of vibrations from the internally-mounted retroreflector.

NSTX FIReTIP System Lasers

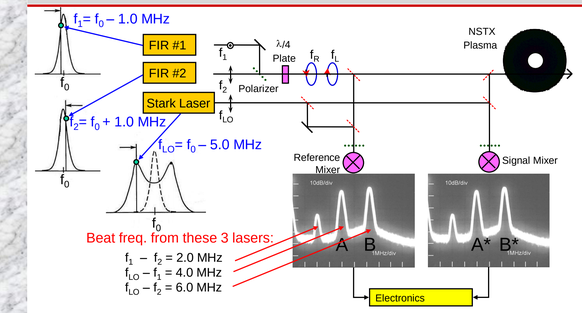

Polarimetry: phase difference of (A*–B*)
Interferometry: phase difference of (B–B*)

FIReTIP Lasers and Optics

- The FIReTIP CO_2 and FIR lasers and associated power supplies/electronics will be located in the "caged" area (shown in green) outside the NSTX-U test cell.
  - Will also include the CO_2 and FIR lasers needed for the reconfigured high-k scattering system.
- Dielectric waveguides will transport the FIR beams (combined FIR #1 and #2 beam, and Stark FIR beam) through holes in the wall to an area near the vacuum vessel.
- HeNe visible light laser interferometer will be installed on all channels for vibration compensation

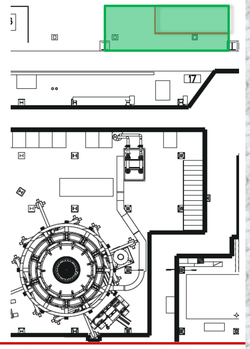

FIReTIP (and High-k) Cage Layout

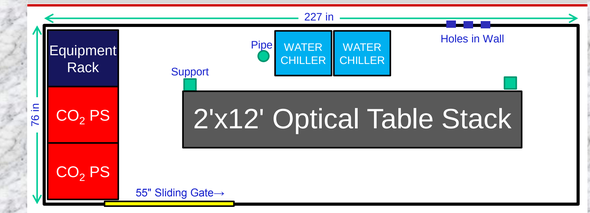

- Three level table stack will hold
  - Two CO_2 lasers (one for FIReTIP and one for High-k) on bottom level
  - Two FIR lasers (Stark-effect laser for FIReTIP, regular FIR laser for High-k) on middle level
  - Two FIR lasers (both for FIReTIP) on top level
- Table stack enclosed and filled with dry air to minimize FIR laser attenuation
- Vacuum pumps (2 dry scroll, 2 dual-stage rotary) placed beneath table
- Wall penetrations for FIReTIP (2) and High-k Scattering (1)

FIR Stark Laser Developments

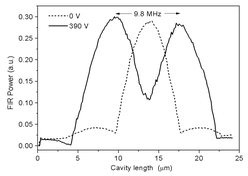

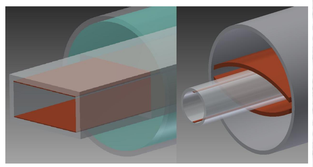

- Immersing the laser gain medium in a uniform electric field induces the Stark effect, in which the emission line breaks into two equivalent gain curves.
- Tuning the FIR laser to one of these frequency-offset peaks is how FIReTIP achieves its extremely high (≥6 MHz) IF frequency.
- The rectangular waveguide in the current design (above, middle) generates a non-gaussian mode which does not couple well to the FIReTIP mixers. This will be replaced with a circular tubing (well suited to a circular gaussian beam), while optimizing the shape of the Stark electrodes (above, right).

FIReTIP Electronics Layout

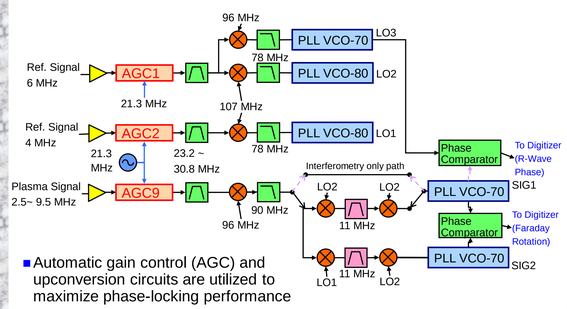

- Automatic gain control (AGC) and upconversion circuits are utilized to maximize phase-locking performance

FIReTIP IF Electronics

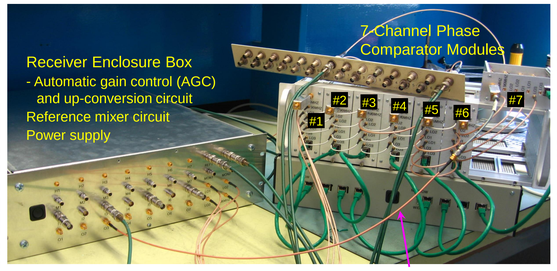

Phase comparator electronics are unchanged from previous implementation

FIReTIP Phase Comparator Modules

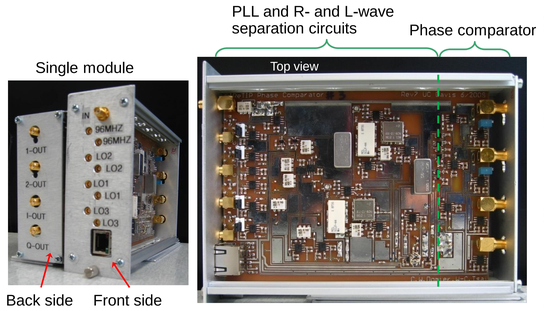

Real Time Density Feedback Control

For Early Density Control and Scaling Experiments

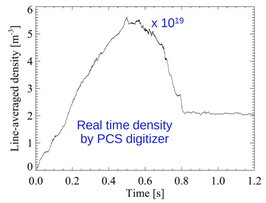

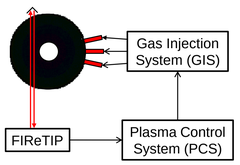

- Real time FIReTIP density signals will be sent through PCS digitizer
- Fringe jump correction will be included in PCS program