13_030318_CLN_01.doc

TO: DISTRIBUTION
FROM: C NEUMEYER
SUBJECT: ANALYSIS OF JOINT RESISTANCE MEASUREMENTS

References:

[1] 13-970430-JHC, "Center Stack R&D Final Report"
[2] 13-001006-CLN-01,"Analysis Of TF Radial Flag–To–Inner Leg Joint Measurements"
[3] Copper Development Association (CDA) pub. "Copper for Busbars", ch. 5, p. 82

This memo provides a review of the information available concerning joint resistance in order to provide design guidance for the new TF joint.

The NSTX R&D Report [1] described tests of joint resistance on a prototype which included the following test combinations:

- with and without silver plating
- 1ksi and 2ksi contact pressure
- vertical loads applied at 9" along the flag of up to 1100 lbs.
- side loads applied at 9" along the flag ends up to 400 lbs.

These tests were typically performed with 100A flowing across the joint and with voltage drop measured directly across the joint at 5 locations from top to bottom. Measurements were reported with resolution of 0.1$\mu\Omega$.

In reference [2] the initial (10/6/98) measurements of the NSTX TF flag joint resistance measurements were compared to those made on 5/25/00 after the completion of Day 0 and Day 1 NSTX operations. Measurements were performed using a Biddle Digital Low Resistance Ohmmeter (DLRO) where 10A of current is injected and the voltage drop is measured at the injection point. The measurements are reported with a resolution of 1.0 $\mu\Omega$. The measurement is made by applying the DLRO the two ends of the half flags, since the region near the joint itself is not accessible. So, the equivalent contact resistance must be backed out of the measurement result.

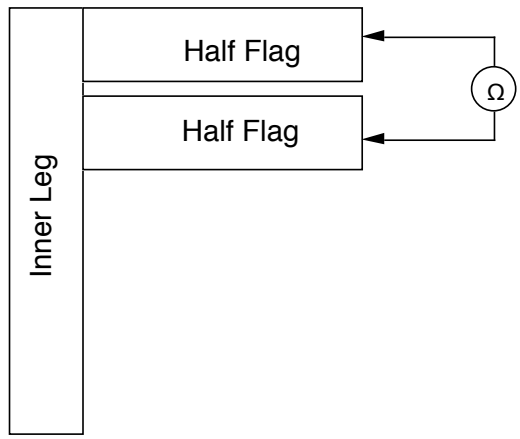

This involves subtraction of the resistances attributable to the half flags and of the path through the inner leg from the measurement. Then the resistance of each half-flag's contact region is equal to 1/2 of the remaining resistance, since they are in series. Finally, the equivalent resistance of the joint is equal to 1/2 of the half flag's contact resistance since in normal operation the two halves are in parallel.

Discrepancies between these measurements and the original R&D measurements were noted in the ref. [2] memo but never fully resolved. The writer has revisited these measurements in an attempt to clarify the discrepancy. Since there are minor differences in the dimensions of the various half-flag pieces (e.g. the upper flags have additional conduction area where the cooling pipe is routed, and the outer layer flags are tapered at their ends) these differences have now been taken into account. In addition, the prior analysis did not account for any resistance associated with the turnaround of current in the inner leg as it flows, during the measurement, in one half-flag and out the other. Finally, the results are normalized to the joint area ($\mu\Omega/in^2$) which is more meaningful since the joint areas are not all the same. With these corrections, the resistance attributable to the joint is slightly less than reported in ref. [2] but not much less. Updated results are summarized in the following table.

	Oct-98	Oct-98	May-00	May-00
	$\mu\Omega$	$\mu\Omega/in^2$	$\mu\Omega$	$\mu\Omega/in^2$
Avg	0.61	4.30	0.65	4.44
Std Dev	0.21	1.33	0.36	2.41
Max	1.17	7.55	1.42	9.23

A major shortcoming in these measurements is the lack of precision. Considering the fact that the DLRO readout is in $\mu\Omega$, and that the result is backed out from the two contacts in series during measurement to the two being in parallel during actual operation, the effective measurement resolution is in units of $0.25\mu\Omega$. Considering that the average joint resistance is of order $0.5\mu\Omega$, this type of measurement is clearly lacking the required precision.

The theoretical relationship between joint resistance and pressure, for a Cu-Cu joint, is given in ref. [3]. A curve fit to this result is $R=10000*P^{1.04}$.

Results from all three of the references are given in the following table and chart.

Test	Plating	Contact Area	Contact Pressure	Resistance	Resistance
		(in^2)	(psi)	($\mu\Omega$)	($\mu\Omega/in^2$)
Theory/Cu/1ksi	None	n.a.	1000	n.a.	7.5
Theory/Cu/2ksi	None	n.a.	2000	n.a.	4
R&D/Cu/1ksi	None	4.40	1000	1.58	6.95
R&D/Cu/2ksi	None	4.40	2000	0.74	3.26
R&D/Ag/1ksi	Silver	4.40	1000	0.14	0.62
R&D/Ag/2ksi	Silver	4.40	2000	0.12	0.53
10/98 avg	Silver	various	2000	0.61	4.30
10/98 max	Silver	various	2000	1.17	7.55
5/00 avg	Silver	various	2000	0.65	4.44
5/00 max	Silver	various	2000	1.42	9.23

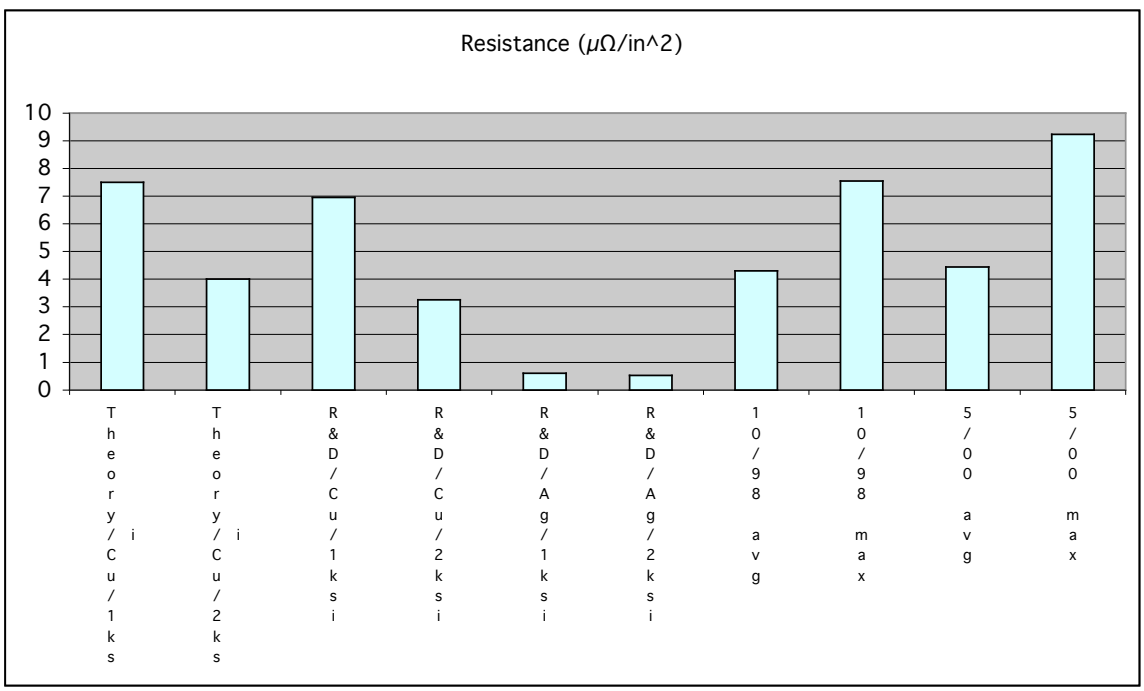

The above results indicate that the R&D levels of joint resistance are not being achieved in practice, and that the actual levels are similar to the ordinary Cu-Cu case (i.e. without silver plating). There are many possible explanations for this discrepancy, such as different plating material or method, imprecise contact surface flatness, incorrect contact pressure, imperfections in one or both of the measurement techniques, etc..

In any case, at this juncture the following is recommended:

1 – Joint design should continue to target 2ksi as the minimum allowable during a pulse, and assume a corresponding resistance of 4$\mu\Omega$/in^2. This resistance corresponds to that of a Cu-Cu joint at 2ksi, which seems to be in rough agreement with the actual practice, despite the silver plating
2 – Design assumptions can be revisited if upcoming prototype joint tests can justify same
3 – During upcoming testing, an improved resistance measurement system should be developed which can provide a measurement accuracy of at least 0.1$\mu\Omega$. At 100A this would require a voltage resolution of 10μV.
4 – A system of voltage taps should be installed on the new inner leg assembly to permit voltage drop measurement at the joints.
5 – Determination of ultimate allowable TF flat top time at 6kG should be based on the ANSYS thermal analysis using the worst case joint resistance as taken from actual field measurements.

cc:	E Baker	A Brooks	M Bell	J Chrzanowski
	P Heitzenroeder	M Kalish	R Marsala	T Meighan
	S Ramakrishnan	H Schneider	M Ono	A VonHalle
	M Williams	I Zatz		