13_050204_CLN_01.doc

TO: DISTRIBUTION
FROM: C NEUMEYER
SUBJECT: PRODUCTION TESTING OF POTTED FLAG/BOX ASSEMBLIES

Summary

This memo presents an analysis of the set-up to be used for production testing of potted flag/box assemblies. The objective of the test is to confirm that the potting has been successful by comparing all boxes in terms of their the reaction to an applied moment similar to the in-plane moment seen during NSTX operation. While the analysis makes a prediction of the anticipated deflection, it is only approximation. Geometry details and nuances associated with the kapton and its adhesive layer were not modeled and will cause the measured results to differ from the simple analysis presented herein. Therefore some judgment will have to be applied once the measured data is available, in so far as allowable deviation from average before remedial action is taken.

Nevertheless the results reported herein indicate that the test can be performed at load levels which do not create undue stress on the flag/box assembly, while generating deflections which can be readily measured. The component of deflection attributable to the potting will be of order 10% of the total deflection of the box, under nominal potting conditions. The potting deflection under sub-standard potting conditions will cause the total deflection to increase substantially, suggesting that faulty conditions will be readily evident.

The test set-up consists of two flags arranged back-to-back. The analysis performed herein is based on a configuration where the two flags are connected together via studs in the first two stud positions at 5klbf tension, with studs absent from the other two positions. Based on the analysis, a total vertical load up to 2500 lbf per box (total 5klbf for the test stand) can be applied before lift-off occurs at the back-to-back flag joint. It is recommended that tests be performed with loads not exceeding this level so as to stay well clear of various limits. This should give ample deflection.

Description of Test Set-Up

Test set-up consists of two flags arranged back-to-back on the MTS table as shown below. This set-up is desirable because, due to symmetry, it puts no net moment on the MTS actuator. One or more studs will be installed in the four stud holes to hold the back-to-back flags together, stud tension TBD. Box deflection will be measured as indicated for both boxes and box to box trends will be examined for consistency. Boxes with poor potting will exhibit excessive deflection.

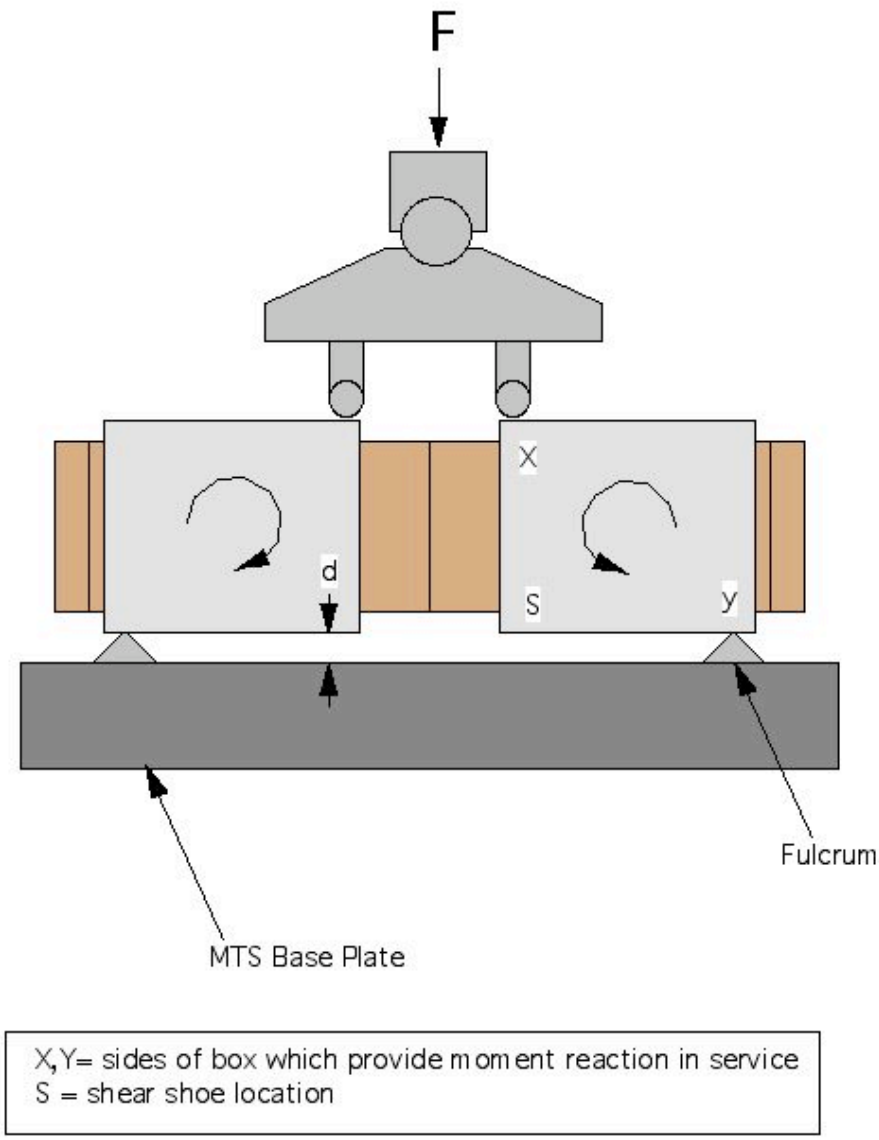

The maximum test condition would be to apply a moment approaching that which occurs during operations at 6kG. In practice, the box reacts approx. 75% of the applied field, so realistic conditions would correspond to a moment of 0.75*70kin-lbf = 50kin-lbf.

On the other hand, we want to insure that we don't damage any of the components of the flag, potting, or box. From this point of view we don't want to apply any more moment than is necessary to obtain enough deflection of the potting to get a good measurement. Factors to be considered are pressure at the back-to-back joints and compression of the potting, versus the amount deflection.

Simplified Analysis

The moment applied to each box is equal to the vertical force pushing down on the box, F_{MTS} times the horizontal distance to the fulcrum, approximately equal to the length of the box.

This moment is reacted primarily at the flag joint (100% under ideal conditions if flag acts as simple rigid body). The vertical force is reacted by the fulcrum.

Equations relating the pressure at the joint versus moment (taken about middle of joint), based on a linear pressure distribution, assuming that the joint does not lift off, and assuming that stud-generated moments about the middle of the joint are zero, are as follows…

$$F_{joint} = \int PdA = w\int_0^H Pdh = \frac{A}{H}\int_0^H (P_0 + kh)dh$$

$$M = 2\int_0^{H/2} (P_a - P)(h - H/2)dA$$

$$P_0 = \frac{6M}{AH} - \frac{F}{A} \quad k = \frac{2(F - AP_0)}{AH}$$

$$P_{\max} = \frac{6M}{AH} + \frac{F}{A} \qquad M_{liftoff} = \frac{FH}{6}$$

The moment contribution from the studs is as follows…

$$M_{studs} = F_{stud} * \left[S_1 * \frac{3H}{8} + S_2 * \frac{H}{8} - S_3 * \frac{H}{8} - S_4 * \frac{3H}{8} \right]$$

where H is the height of the flag, F_{stud} is the force per stud, and S_i = 1 if stud "i" is in place, and Si =0 if stud "i" is not used. Here i=1 is the bottom stud and i=4 is the top stud. Note that the omission of studs 3 and 4 leads to a higher joint moment.

The deflection of the potting can be estimated using a linear model, along with the assumption that the potting provides a response in compression, but not in tension, over some length r=R…

$$\delta_{potting}(r) = kr \qquad F(r) = \frac{\delta(r)AE_{potting}}{t_{potting}}$$

$$M_{potting} = \int \frac{2kr^2 WE_{potting}}{t_{potting}} dr = \frac{2kWE_{potting} R^3}{3t_{potting}}$$

$$k = \frac{12t_{potting} M_{potting}}{WE_{potting} L^3} \qquad \delta_{\max} \approx \frac{M_{potting} t_{potting}}{6WE_{potting} L^2}$$

… where W is the width of the flag, and L is approximated as ½ of the length of the box, based on the idea that the box will rotate about the center of the box.

The two end-to-end flags bolted together can be approximated as a simply supported beam. Per "Formulas for Stress and Strain", Roark and Young, Table 1 case 2, the section's bending moment of inertia is….

$$I = \frac{WH^3}{12}$$

and the maximum beam deflection is, per Table 3 case 1e, will be….

$$\delta_{flag} = \frac{WL^3}{48EI}$$

where L is equal to the length between the fulcrums and E is the modulus of copper.

A spreadsheet calculation was performed to estimate the maximum pressure at the joint, the deflection of the potting, and the deflection of the flags. As a test case, it was assumed that the force applied should not result in liftoff at the joint. A spreadsheet calculation was performed to estimate the maximum pressure at the joint, the deflection of the potting, and the deflection of the flags. Results are summarized in the following table for two cases. The first is with only the two lower studs in place, and the second is with all four studs in place.

Top Stud	0	1	
Second Stud	0	1	
Third Stud	1	1	
Bottom Stud	1	1	
#Studs	2	4	
Force per Stud	5000	5000	lbf
Total Stud Force	10000	20000	lbf
JOINT			
H	5.000	5.000	in
W	0.781	0.781	in
A_gross	3.9	3.9	in^2
F_MTS per Box	2778	2222	lbf
r_MTS	7.5	7.5	in
M_MTS	20833	16667	in-lbf
M_studs	12500	0	in-lbf
M_joint	8333	16667	in-lbf
P0	0	0	psi
K_joint	1024	2049	psi/in
P_max_joint	5122	10243	psi
d_stud hole	0.437	0.437	in
A_net	3.3	3.3	in^2
Pressure pf	118%	118%	
P_max__joint_peak	6051	12103	psi
POTTING			
E_potting	700	700	ksi
t_potting	0.125	0.125	in
l_potting	7.5	7.5	in
w_potting	1.000	1.000	in
K_potting	1.06E-04	8.47E-05	in/in
delta_potting	0.397	0.317	mil
P_max_potting	2222	1778	psi
FLAG			
I_flag	10.42	10.42	in^4
F_MTS_total	5556	4444	lbf
E_flag	16.7	16.7	msi
L_beam	19.00	19.00	in
delta_flag	4.564	3.651	mil
delta_box = delta_potting+delta_flag	4.960	3.968	mil
delta_potting/delta_flag	9%	9%	

These results show that….

1) The two stud approach (@ 5klbf/stud) is not only easier to implement than four studs but also results in less stress at the joint for similar deflections;

2) A load of approx. 5klbf total from the MTS will be sufficient to create measurable deflections without causing liftoff at the joint;

3) The potting will nominally (E=700ksi) deflect around 0.4 mils, while the flag itself will deflect about 10x as much;

4) The peak pressure at the joint (after accounting for the area lost from the holes) will be of order 6ksi;

5) The peak pressure in the potting will be of order 2.2ksi.

The following figure shows how the displacement at the box, equal to the sum of the potting displacement plus the flag displacement, will vary with potting modulus. The result shows that the set up will be indeed be sensitive to defective potting which exhibits a modulus below the nominal value.

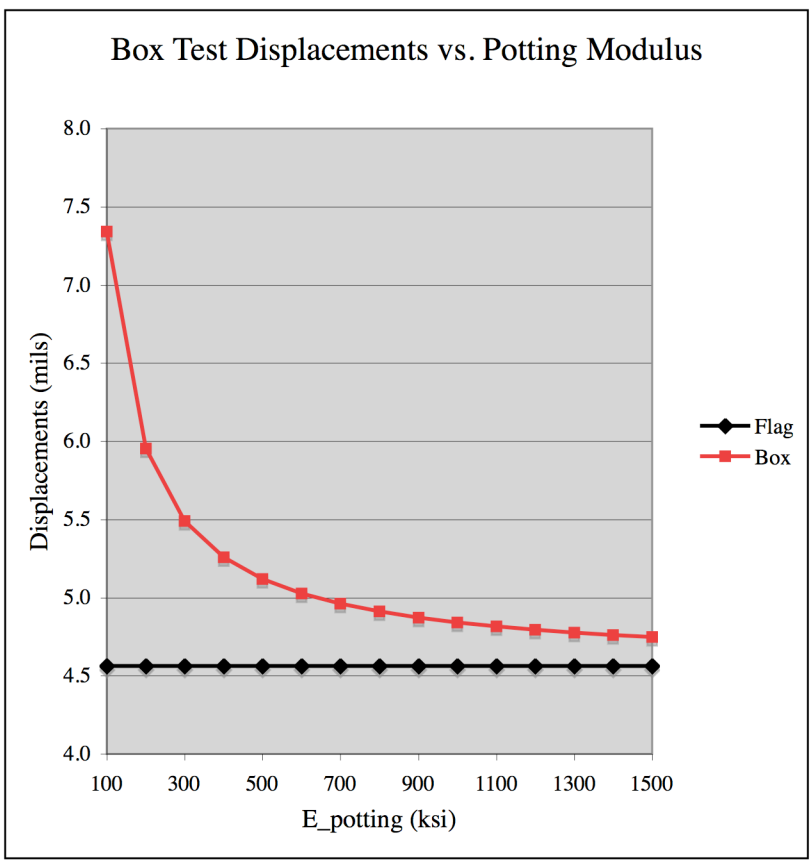

Finite Element Model

A 3D FEMLAB simulation of the test was performed. Only one flag box was modeled, since the test arrangement is symmetric. The load was applied along one edge of the box and the fulcrum was represented as an x-y-z boundary constraint on the opposite edge. Results obtained were consistent with those reported above, considering the approximations made. Deflections and stresses at the two compressed potting regions were approximately equal. At 700ksi modulus, the potting deflection was about the same 0.4 mils as predicted by the spreadsheet, but the flag deflection was less, about 2 mils instead of 4.5 as predicted. This could be explained by the fact that the section modulus of the potted flag/box is greater than the section modulus of the flag alone, which was not accounted for. In any case the difference is in the direction of increasing sensitivity to the measurement of the potting deflection, which is what we are after. Figures from the FEMLAB simulation are given below.

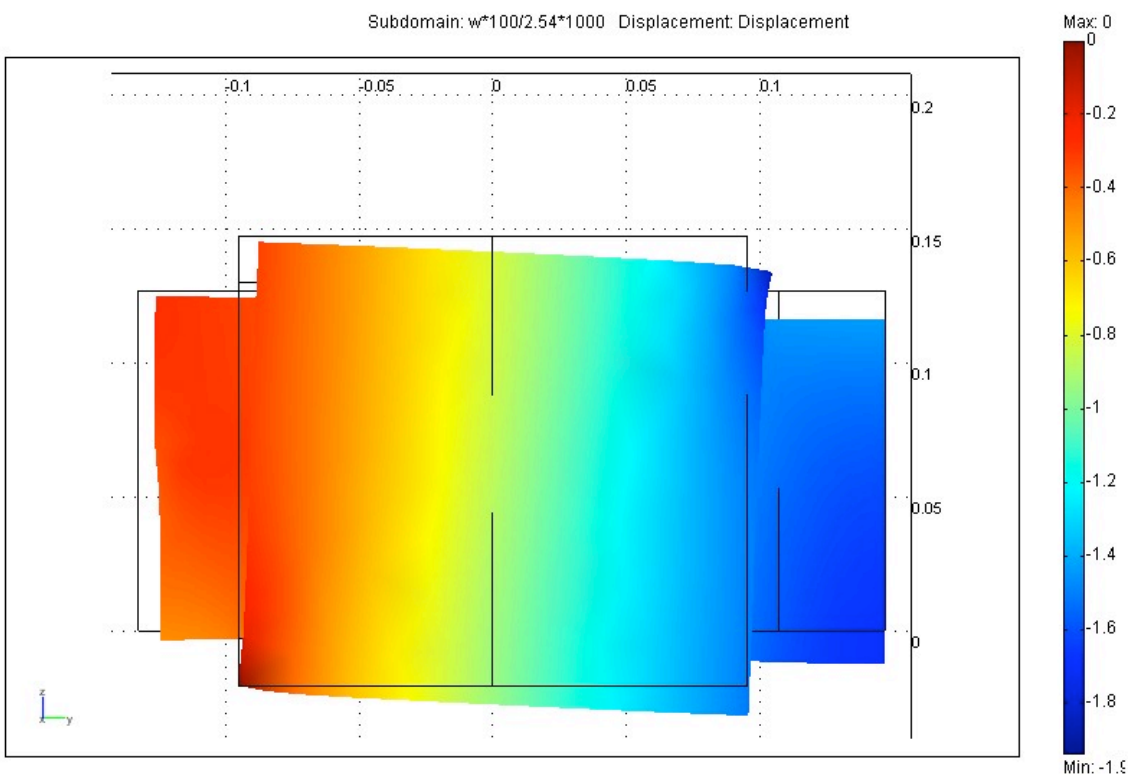

Side View of Flag Box Showing Displacement (mils)
Notes:
1) *4.5 mil flag deflection was predicted*
2) *Distortion at flag end results from only two lower studs in use*

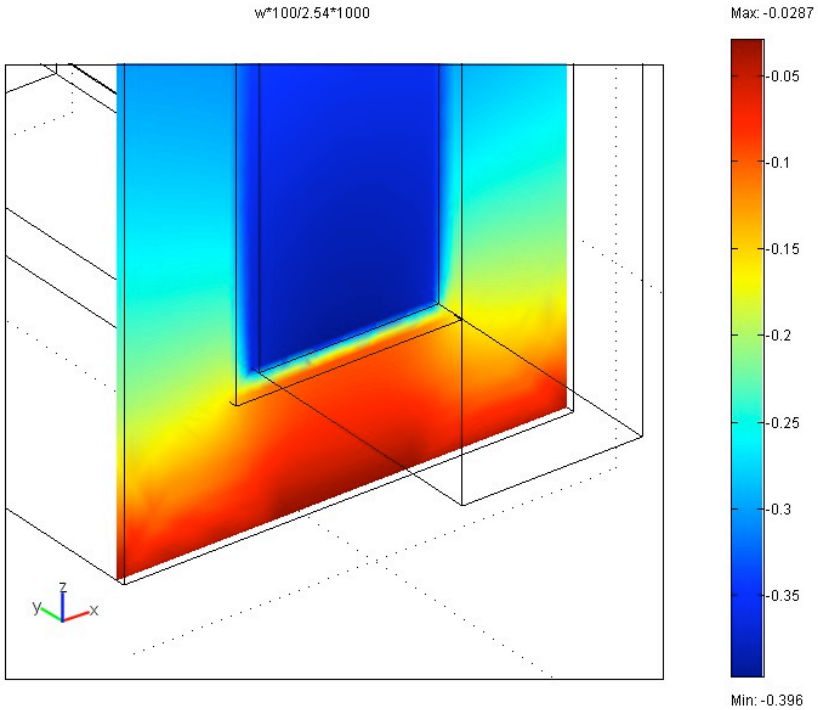

Displacement (mils) of Box and Potting Near Fulcrum
Note: -0.397 mil potting deflection was predicted

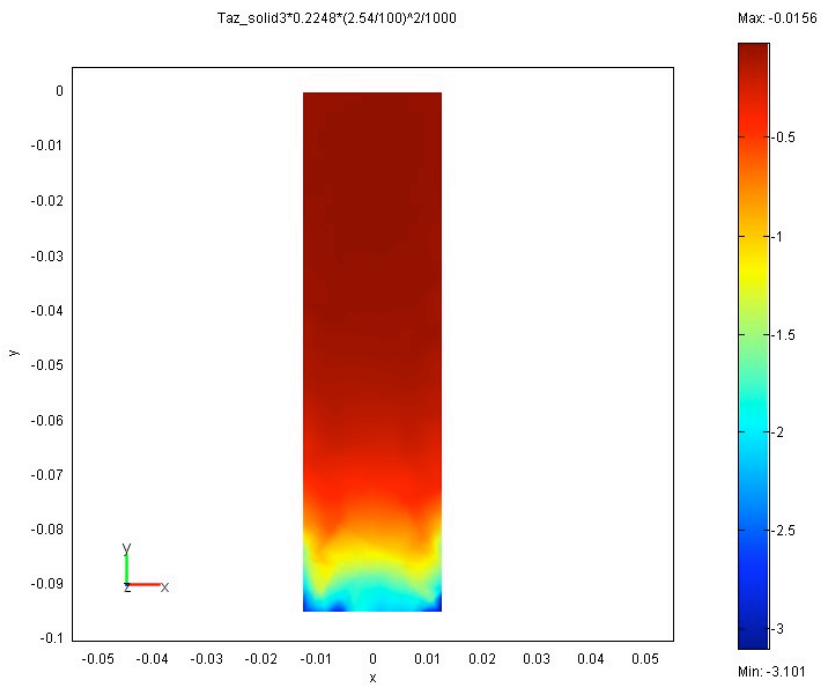

Compression (ksi) of Potting on End Near Fulcrum
(Note: -2.2 ksi was predicted)

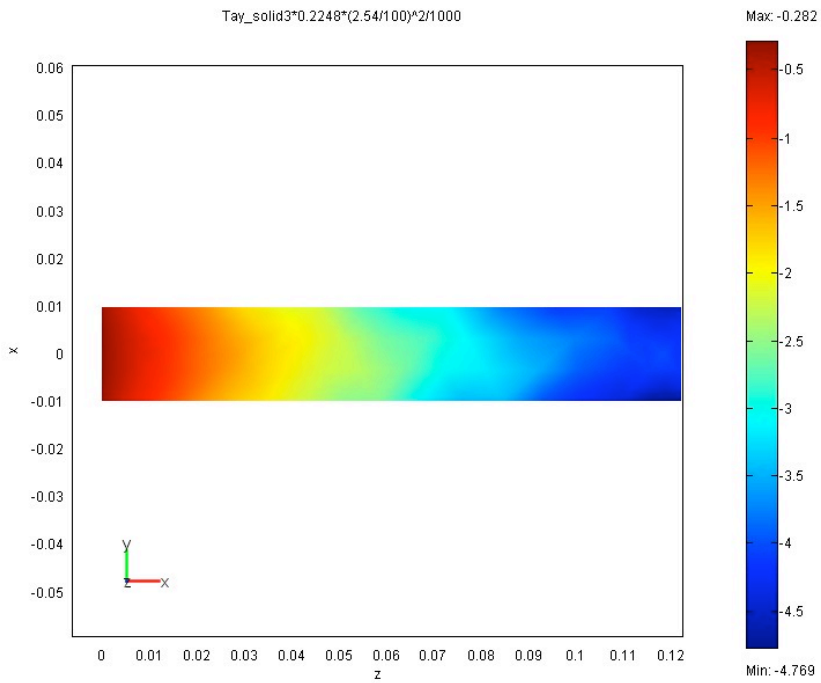

Pressure (ksi) at Joint
(Note: 0 to -5.1 ksi was predicted)

Conclusions

The analysis performed herein is based on a configuration where the two flags are connected together via studs in the first two stud positions at 5klbf tension, with studs absent from the other two positions. Based on the analysis, a total vertical load up to 2500 lbf per box (total 5klbf for the test stand) can be applied before lift-off occurs at the back-to-back flag joint. It is recommended that tests be performed with loads not exceeding this level so as to stay well clear of various limits. This should give ample deflection and sensitivity so that faulty potting can be detected.

Cc:

J Chrzanowski	L Dudek	T Egebo	T Kozub	M Ono
J Schmidt	A Von Halle	M Williams	R Woolley	I Zatz