71-000320-CLN-01

TO: DISTRIBUTION
FROM: C NEUMEYER
SUBJECT: EVALUATION OF BAKEOUT OPTIONS

References:

[1] 13-970214-AWB-01, "Bakeout of Vacuum Vessel and Internals"
[2] NSTX-CALC-33-1, "Center Stack Bakeout Ohmic Heating", C. Neumeyer
[3] NSTX-CALC-33-2, "Compressed Air Bakeout Estimate, C. Neumeyer
[4] IP-NSTX-2165 (MPC-1) "Installation of Outboard Divertor Assemblies"
[5] "TFTR VV Heating/Cooling Compressor & Accessories", Operations Manual TFTR Ops Center (file no. M030W)
[6] "TPX VV Heating and Cooling System", Y Feldshteyn et al, SOFE 94
[7] "Optimized Baking of the DIII-D Vessel", P Anderson et al SOFE 99

This memo presents the results of a scoping study of various options for NSTX bakeout. Whereas the original design of NSTX called for the use of "Dowtherm A" as the heat transfer fluid, this has been abandoned because of concerns about 1) flammability and 2) pollution of the interior of the vacuum vessel in case of a leak. Therefore a new heat transfer mechanism is sought.

It is concluded that the use of an open loop compressed air system is the best approach. Preliminary recommendations on component sizes are given herein. The calculations need to be verified prior to proceeding.

Background

Heating Requirement

A study described in ref. [1] used a 2-D ANSYS model to estimate the power input required to bake the internal hardware of NSTX (the outboard divertor, passive plates, and center stack casing) of NSTX at 350°C , while maintaining 150 °C on the outer vacuum vessel, and 25 °C on the OH and PF1a coils within the center stack casing. The following steady state heat flow was calculated (for the case without special shielding behind the divertor and passive plate structures, representing the NSTX as-built condition):

Heat Load Estimates

Heat Inputs….	
Center Stack Casing	5 kW
Passive Plates	36 kW
Outboard Divertor	13 kW
TOTAL INPUT	55 kW
Heat Outputs….	
Outer VV Cooling Active Cooling	46 kW
Outer VV Insulation	4 kW
OH & PF1a Coils	5 kW
TOTAL OUTPUT	55 kW

The following additional points mentioned in ref. [1] are noteworthy:

- Due to the relatively high temperature, radiation dominates over conduction;
- Due to 1) and to the active cooling of the outer VV, the thermal time constant is relatively short compared to the presumed 24 hour heat up time.

Considering 1) and 2) above, it can be concluded that a large forcing factor is not required, i.e. the total required power is equal to the total power loss under steady conditions.

The above is confirmed by the following argument. First, an estimate of the weight of the copper backing plates of the outboard divertor (OBD), primary passive plate (PPP), and secondary passive plate (SPP) is as follows:

Dimensions of Internal Hardware to be Baked

	R (in)	Z(in)	L(in)	T(in)	V (in^3)
OBD	24.66	65.025	24.4	1.0	5530.6
	47.393	56.071			
PPP	53.54	39.594	18.8	0.5	3329.1
	59.416	21.775			
SPP	43.823	54.143	15.5	0.5	2346.9
	52.752	41.509			
				Wt. (lbs)	1506.7

The total heat capacity of the copper is 263kJ/degC. Now, given 50kW of leakage with a temperature differential of (350-150)=200C, one can equate this (neglecting non-linearities) to an equivalent thermal resistance of 200/50000 = 0.004 degC/watt. Then the overall thermal time constant of the system is 0.004 * 263000 = 1052 seconds. Said

another way, the thermal resistance is quite low and dominates the behavior. Significant additional heating power capacity need not be reserved to overcome thermal inertia.

Concerning the power input to the center stack casing, the NSTX project has put into use a DC power supply capable of delivering 4kA to the center stack casing, the central section of which has a resistance of 830$\mu\Omega$ at 350degC (ref. [2]). Therefore the available heat input is $4kA^2*830\mu\Omega = 13.3kW$, which is to be compared to the 5kW called for in ref. [1]. Therefore, taking credit for this additional heating it will henceforth be assumed that the requirement for heat input to the OBD, SPP, and PPP is ≈ 50kW.

Heat Delivery System

The mechanism for delivery of heat to the OBD, SPP, and PPP is a system of stainless steel tubing which consists of sections brazed into the copper PFC backplates along with additional lengths which connect the parts together. Picture and schematic circuit is shown in the following figures.

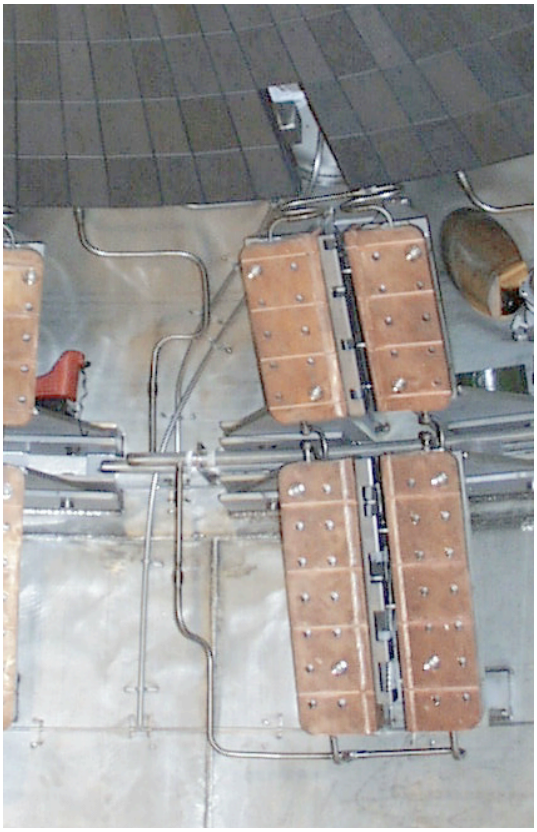

Stainless Steel Tubing System and Connections to OBD, PPP, SPP

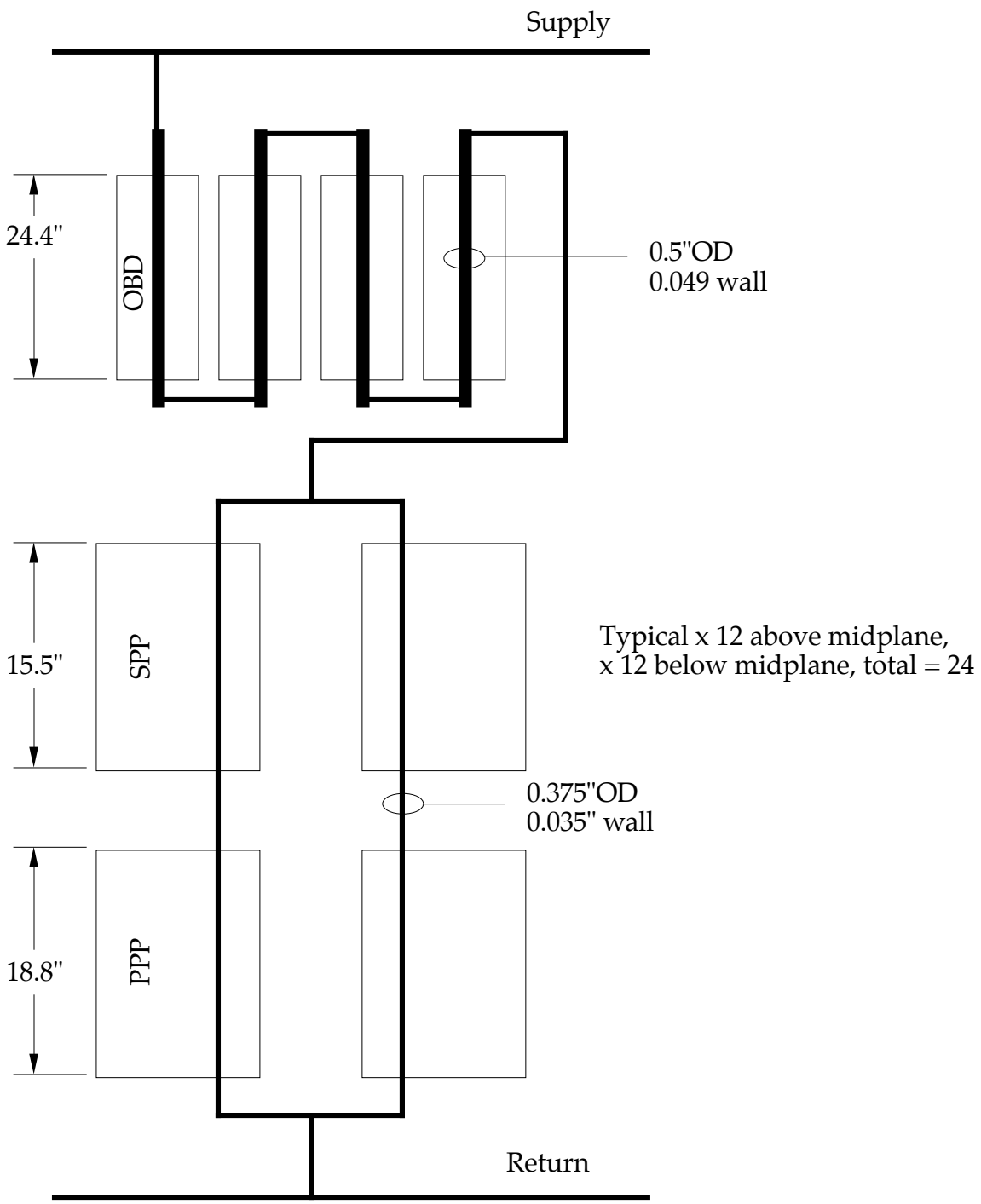

Schematic of Tubing (ref. [4])

The following table contains an estimate of the effective lengths and heat loads in each of the 24 circuits.

Parameters of Heat Transfer Tubing Circuits

Section	Length (in)	ID (in)	Heat Load (watt)	Heat Flux (watt /in)	Heat Flux (watt/ sq in)	# Series	# Parallel	Useful Heat Transf .Area (sq in)	Equiv. Length (" of 0.375" tubing)
Supply - OBD	24	0.305	0	0	0.0	1	1	0.0	24.0
OBD	24.4	0.402	140	5.7	4.5	4	1	123.3	24.5
OBD-OBD Jumper	4	0.305	0	0	0.0	3	1	0.0	12.0
OBD-SPP Jumper	36	0.305	0	0	0.0	1	1	0.0	36.0
SPP	15.5	0.305	379	24	25.5	1	2	29.7	7.8
SPP-PPP Jumper	6	0.305	0	0	0.0	1	2	0.0	3.0
PPP	18.8	0.305	379	20	21.0	1	2	36.0	9.4
PPP-Return	24	0.305	0	0	0.0	1	1	0.0	24.0
							∑	189.0	140.7

A significant disparity of the heat flux requirement is noted to exist between the OBD and SPP/PPP. In order to overcome this to some degree, a flow reversal scheme can be used such that the hotter inlet side of the heat transfer fluid stream is applied for a greater fraction of the time to the SPP/PPP side than to the OBD side. In this way the time averaged heat transfer can be controlled to some degree.

The useful heat transfer area is based on the area inside the tubes through heat is intended to flow. The equivalent length of 0.375" tubing, for purposes of pressure drop calculations, takes into account the series/parallel arrangement and also scales the length of the larger OBD tubing by a factor of $(ID_{0.375}/ID_{0.5})^5$.(ref. [3]).

<u>Heating Options</u>

Liquid Heat Transfer

The original design called for the use of "Dowtherm A" as the heat transfer mechanism. However, because of concerns about 1) flammability and 2) pollution of the interior of the vacuum vessel in the event of a leak, the idea of using Dowtherm was abandoned.

An alternate chemical called "HITEC" has been identified which could substitute for the Dowtherm and alleviate flammability concerns. The chemical is available from Coastal

Chemical Company (Mr. N. Petrosky, (732) 671-3826) and is in common use as an industrial heat transfer fluid. The following table compares the Dowtherm and HITEC.

Dowtherm vs. HITEC Properties

	Dowtherm A	HITEC
Composition	Diphenyl Oxide, Biphenyl	Potassium Nitrate, Sodium Nitrite, Sodium Nitrate
Melting Point	12ºC	142ºC
Atmospheric Boiling Point	257ºC	816C
Normal Usage	15-400ºC	150-540ºC
Water Soluability	No	Yes
Fire Hazard	Flammable	Non-flammable

The two chemicals have similar heat transfer properties, and similar toxicities.

Use of the HITEC would be inconvenient because it is a solid at room temperature. However, given that the "ambient" temperature seen by the internal hardware loops during bakeout is 150ºC, and the fact that the HITEC is water soluable, the inconvenience of filling, draining, and purging would be lessened somewhat.

In any case, because of concern about possible pollution of the interior of the vacuum vessel in the event of a leak, the idea of using HITEC is deemed unacceptable.

Since this concern will likely exist with any liquid except for water, which (at allowable pressures) is limited to 150ºC, no liquid solution is considered to be acceptable.

Closed Loop Gaseous Heat Transfer

The following figure depicts a generalized closed loop system. A heater raises a closed volume of gas or vapor from ambient temperature and pressure to a base temperature and pressure. A superheater increases the temperature above the base temperature, and as the gas or vapor flows through the heat transfer piping there is a temperature and pressure drop, corresponding to the transfer of heat to the target.

In order to create flow, pumps on the inlet or outlet sides generate pressure rise, leading to flow. In addition, coolers could be used to generate pressure drop, leading to flow.

Candidate gases and vapors are N_2, He, and saturated steam. Compared to N_2, He would be superior because of its higher specific heat (C_p = 1.25 vs. 0.24 BTU/lb-deg F) and low viscosity. Saturated steam behaves more or less as an ideal gas and falls somewhere in between ($C_p \approx 1$) . It offers the additional feature that the change of state from liquid to gas and back could be used to advantage.

If He or N_2 were to be used, flow would be accomplished by a single pump (compressor) on the inlet. No cooler would be used.

If steam was used, then the base heater would be a steam generator (boiler), and the cooler would be a condenser, and the outlet pump would be used to replenish the boiler.

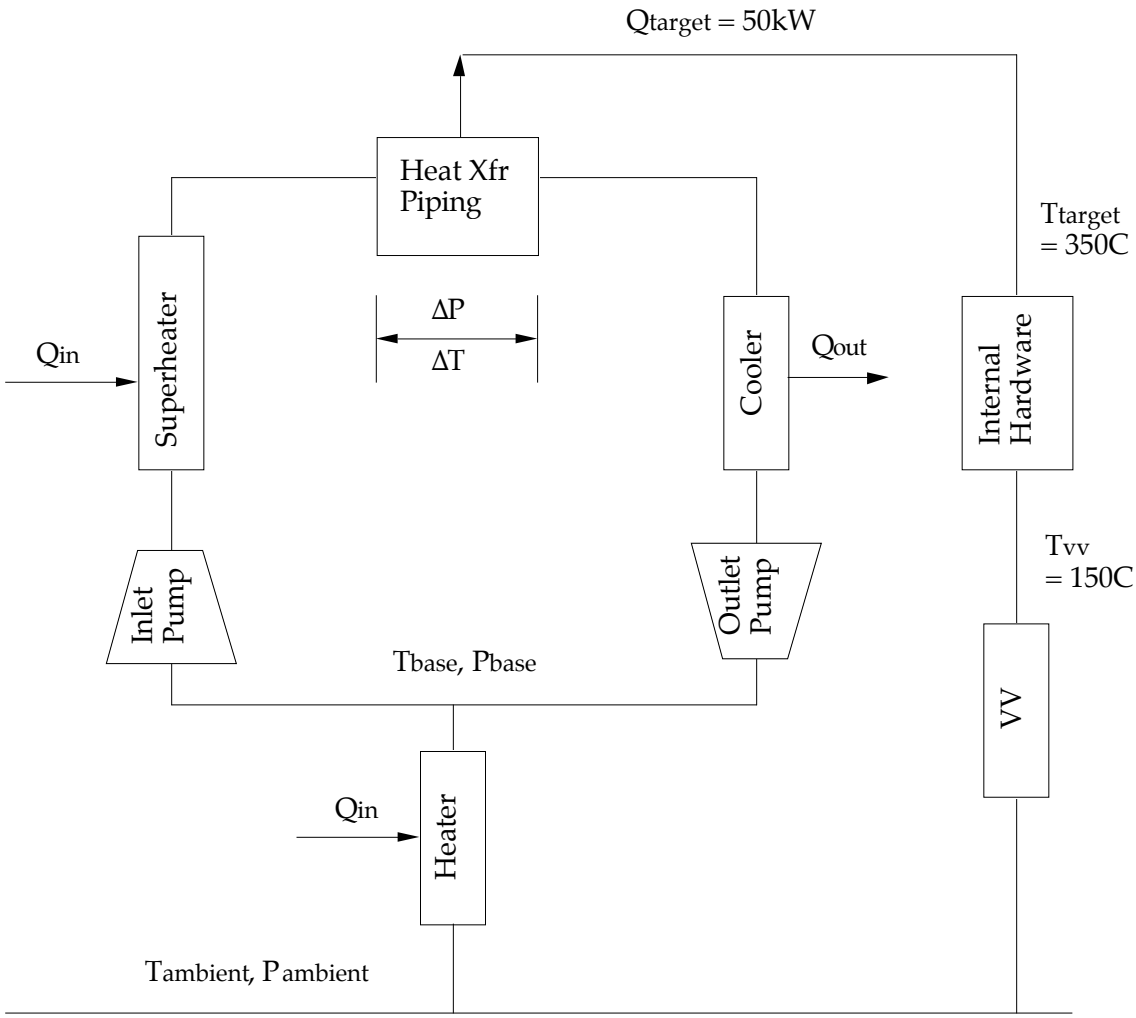

Closed Loop System

Examples of closed loop systems are TFTR (ref. [5]) and TPX (ref. [6]).

In the case of TFTR, the system was air-based and consisted of a compressor only, which provided both the heating and flow. Parameters are listed in the following table.

TFTR Bakeout System

Mass flow	800.0	lbs/min
Compressor Inlet Temperature	196.7	degC
Compressor Outlet Temperature	271.1	degC
ΔT	74.4	degC
Compressor Inlet Pressure	9.3	psig
Compressor Outlet Pressure	21.3	psig
Pressure Drop	12.0	psig

Input power	900	Hp
	671.4	kW

In the case of TPX (design only, never built), the system was steam-based with superheated steam circulated @ 76 psi. Flow was by natural convection in the double wall vacuum vessel inner space, in combination with a cooler (condenser) on the outlet side.

Conclusions regarding the use of closed loop gaseous heat transfer in the NSTX context are as follows:

1) The unavailability of a suitable high temperature (≈ 400 °C) compressor in the size range required for NSTX prevents the use of a He or N_2 based scheme.

2) The TFTR York Compressor system does not match the NSTX requirements in terms of pressure (NSTX is too high), flow (NSTX is too low) , or power (NSTX is too low).

3) The steam based approach is unsuitable because the natural convection and condenser action (as invoked by the TPX design) will not work in the case of NSTX where a significant pressure is needed to force flow through the tube system.

Overall, the closed loop approach, although technically the most attractive because of efficiency, appears not to be feasible due to 1) above.

Open Loop Gaseous Heat Transfer

The following figure depicts a generalized open loop system. An inlet pump provides pre-heating and the pressure required to establish flow. Return air is passed through a heat exchanger for heat recovery. A supplemental heater provides the final desired temperature. The output is exhausted to atmosphere.

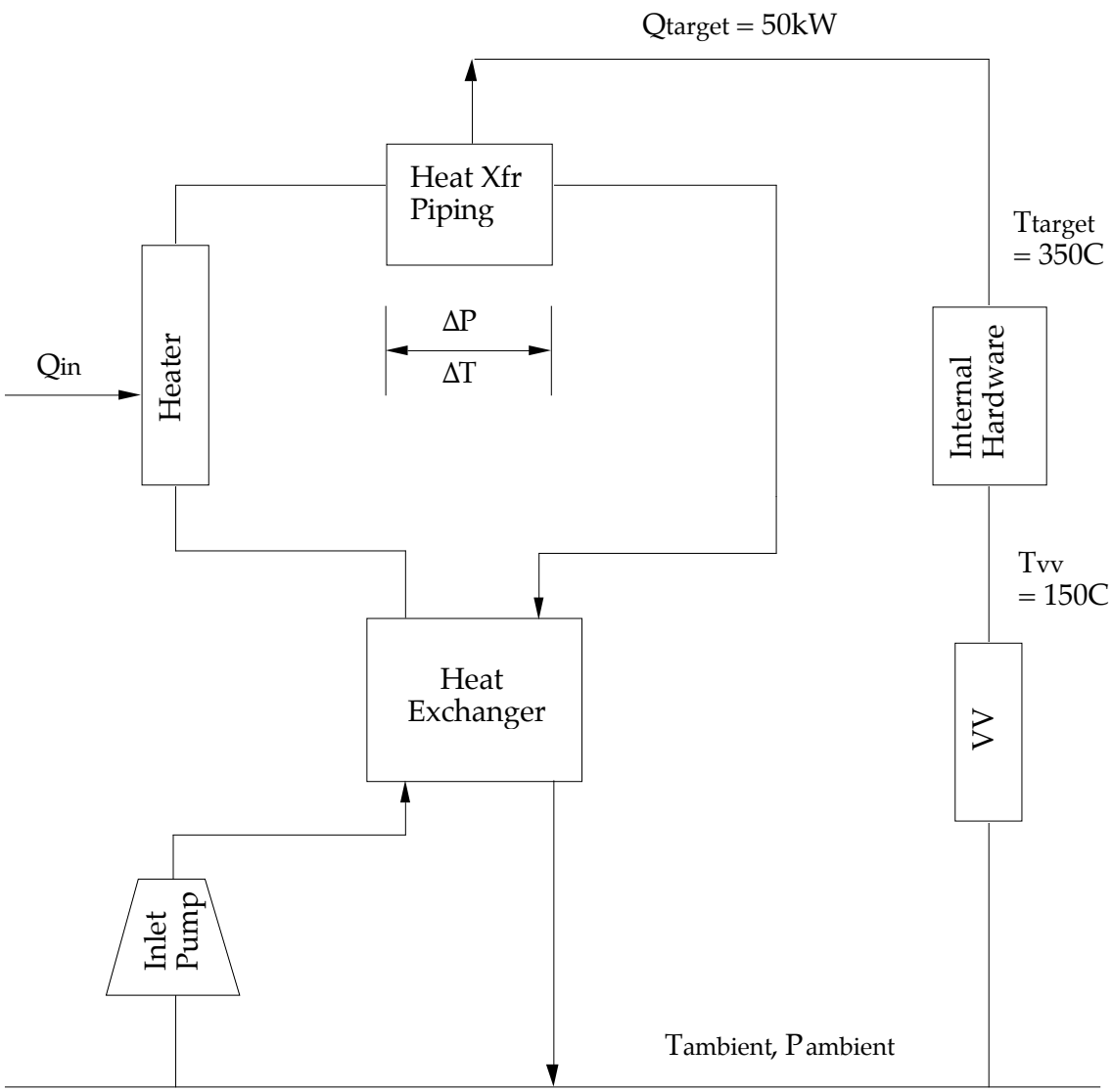

Open Loop System

In the case of an air-based system, the inlet pump would be a compressor, operating with inlet air at normal atmospheric conditions. In the case of a steam-based system the inlet pump would be a steam generator (boiler), and the additional heater a "superheater" which transforms saturated steam to superheated steam. In this case the heat exchange would be with the boiler feedwater.

An examples of an open loop system is the GA DIII-D bakeout system (ref. [7]), which relies on a combination of inductive and open loop compressed air heating. Parameters are listed in the following table.

DIII-D Bakeout System

Mass flow	150	lbs/min
Compressor Outlet Temperature	170	degC
Heat Exchanger Outlet Temperature, Input Gas Stream	250	degC
Heat Exchanger Outlet Temperature, Exhaust Gas Stream	190	degC
Compressor Outlet Pressure	45	psig
Additional Electric Heating	72	kW
Total Compressor Power	285	Hp
Total Input Power	213	kW

Conclusions regarding the use of open loop gaseous heat transfer in the NSTX context are as follows:

1) Compressed air scheme appears feasible
2) Steam scheme is very inefficient because energy expended in vaporization of water is not useful.

Other Heating Schemes

Other heating schemes which have been discussed include electrical (inductive, ohmic), strip heaters, and heat lamps.

Inductive and ohmic are not feasible because the structures to be heated (the copper plates) are extremely conductive compared to other structures which would also unavoidably be excited (the vacuum vessel); almost all heating would occur in the other structures.

Strip heaters would be a good solution, albeit with fairly complex wiring and vacuum vessel feedthroughs. The main problem is that they cannot be installed now without completely removing the OBD, SPP, and PPP, which would be unacceptable.

Retractable quartz heating lamps have been discussed, but not extensively studied. In fact they were the originally proposed method but were dropped in favor of the Dowtherm approach. The ability to control the deposition of heating power was mentioned as a shortcoming.

Sizing of Open Loop Compressed Air Heating System

A spreadsheet calculation (ref. [3]) was developed to provide a means for sizing the system. Method is as follows:

1) Main Inputs:

   -Mass flow
   -Compressor outlet pressure
   -Heat load (typically 50kW)
   -Target temperature
   -Dimensions of tubing, etc.

2) Main Outputs

   -Compressor motor power
   -Compressor outlet temperature
   -Average temperature required in tubing
   -ΔT across tubing (Inlet to Outlet)
   -Aux. electric heating requirement (after heat recovery in heat exchanger)
   -Temperatures and pressures around the loop
   -Overall efficiency

3) Method

   - Calculate compressor output temperature
   -Determine tubing heat transfer film resistance based on flow and area
   -Determine average air stream temperature requirement to deliver heat through film resistance
   -Determine temperature drop in air stream required to deliver heat through thermal resistance based on mass flow
   -Calculated tubing inlet and outlet temperatures based on above
   -Determine additional electrical heating required to increase temperature over compressor outlet temperature
   -Determine heat recovery from heat exchanger
   -Calculate overall efficiency

   Pressure drop and heat loss outside due to bends and external manifolds and piping is not included.

   Parameters arrived at for NSTX are listed in the following table.

NSTX Bakeout Parameters

Mass Flow	690.0	SCFM
	0.9	lb/sec
Compressor Outlet Pressure	125.0	psig
Motor Power	149.1	Hp
Pipe OD	0.375	in
Pipe Wall	0.035	in
Pipe Length	12.0	ft
Total Heat Load @ Ttarget	50000.0	watt
Ttarget	350.0	degC
Tubing Inlet Temperature	423.6	degC
Tubing Inlet Pressure	158.6	psig
ΔT across tubing	108.5	degC
ΔP across tubing	60.5	psi
Aux. Electrical Heat Input	55.3	kW
Net Efficiency	0.3	

The above is similar in scale to the GA system. The compressor rating is that of a standard Ingersoll-Rand oil-free rotary screw compressor. In conversation with an Ingersoll-Rand engineer (Mr. J. Garfield, (800) 776-1366)) it was confirmed that these units can run with their after-coolers removed (i.e. heat of compression not removed), and that the cost (not discounting for after-cooler removal) is of order $90K. Unit size is rather large (9′ l x 5′ w x 6′h).

Trade-off between mass flow and various parameters is given in the following figure.

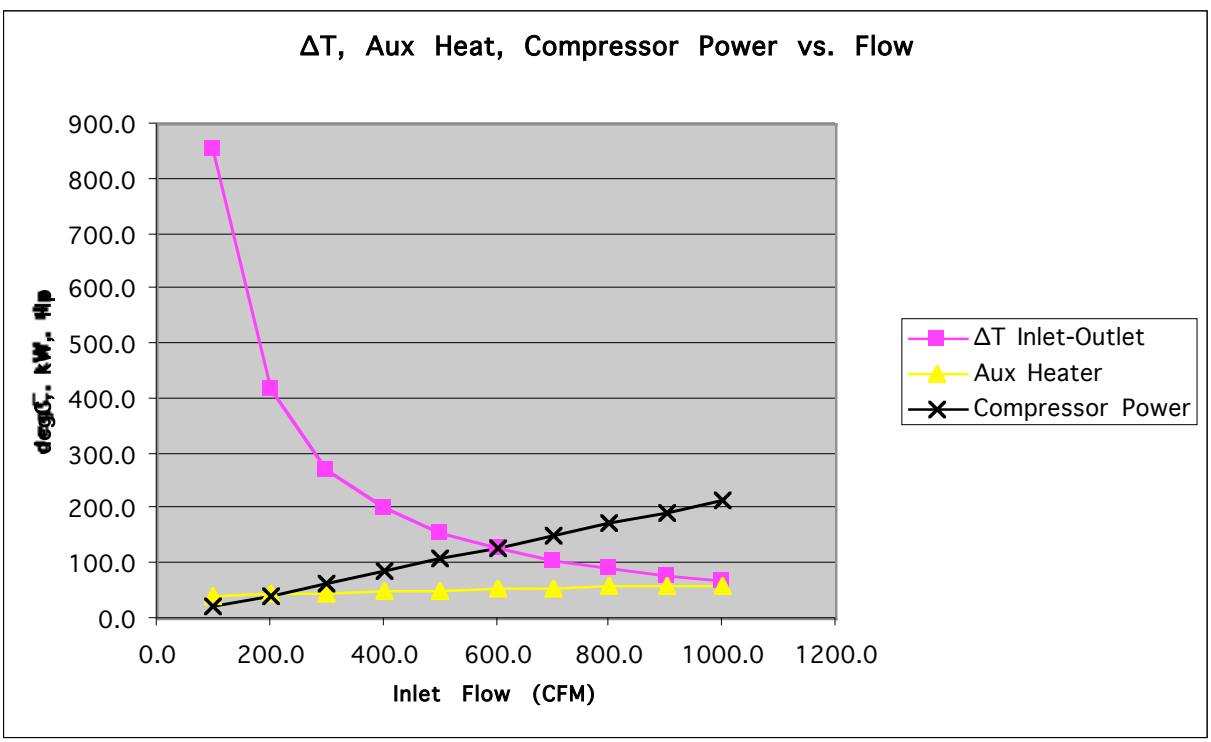

It is noted that at the higher mass flow rate, the temperature from inlet to outlet drops, at the expense of more compressor power and more auxiliary electric power input (i.e. the performance improves but the cost and efficiency go down).

The selected parameters (690 SCFM) result in a ΔT of approx. 100 ºC across the load. This is quite high compared to the 10 ºC or so which was achievable using Dowtherm. The inclusion of features which can allow the aforementioned swapping of input and output sense as a function of time can serve to balance the average power deposition and prevent large temperature gradients.

The following figure shows a schematic of the system including valves which can reverse the input and output sense.

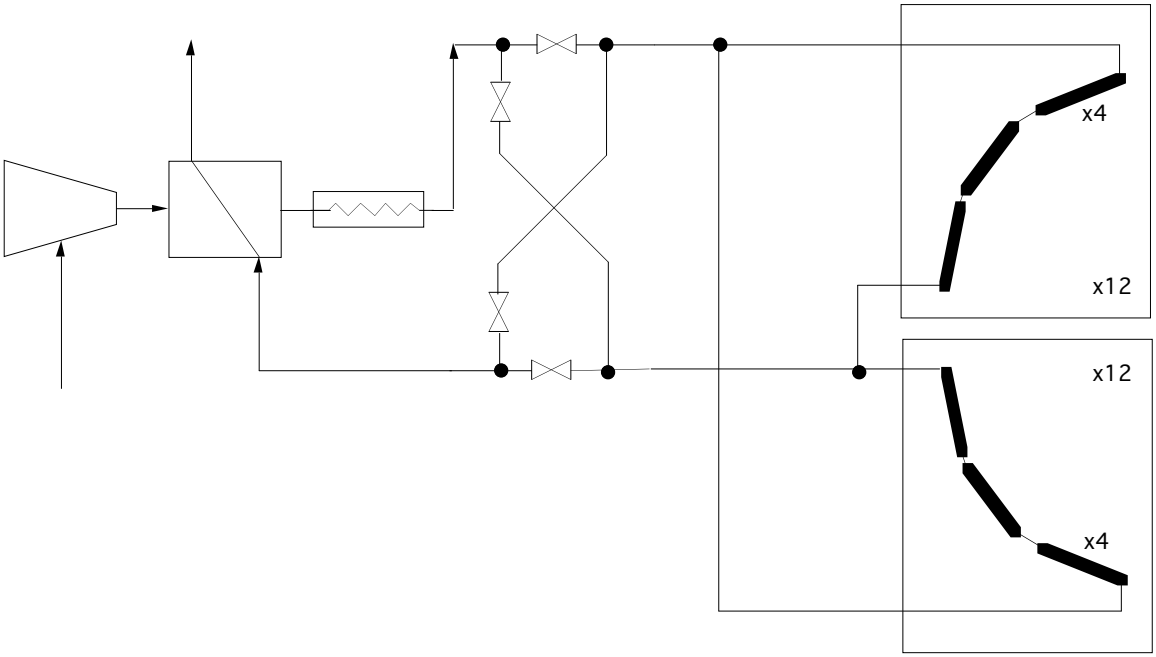

Schematic of Open Loop Compressed Air Heating System

Summary Recommendations

The open loop compressed air approach appears to be feasible.

The calculations of pressure drop and heat transfer coefficients depend on empirical formulae and are highly non-linear; discrepancies in these results could significantly effect the performance. They need to be checked/confirmed by additional calculation and/or prototype measurement. Prototype measurements of pressure drop and heat

transfer conductance would be straightforward except for the fact that high temperatures are involved. A compromise would be to make measurements at room temperature and then extrapolate to high temperature.

Depending on the outcome of the checking and confirmation, the auxiliary electric heater, and maybe the compressor as well, should be selected with ample margin over the minimum anticipated requirement, keeping in mind the additional uncertainties associated with the basic 50kW heat load requirement.

J Chrzanowski
W Blanchard
P Heitzenroeder
M Kalish
G Labik
M Ono
R Parsells
A Von Halle
M Williams

NSTX File