4 A SIMPLE AC POWER SYSTEM

4.1 OVERVIEW

The previous chapter introduced the basics of power system simulation. This chapter continues this using a slightly more complex AC power system. In this circuit, power is generated in one *subsystem*, transmitted through a *transmission line* to a load in a second subsystem. A *fault* is applied to the circuit at the load for a short duration. A protection system, not simulated here, is assumed to detect the fault and to send a signal to open a *breaker*, disconnecting the faulted area from the source. After the fault clears, the breaker is closed, re–energizing the load.

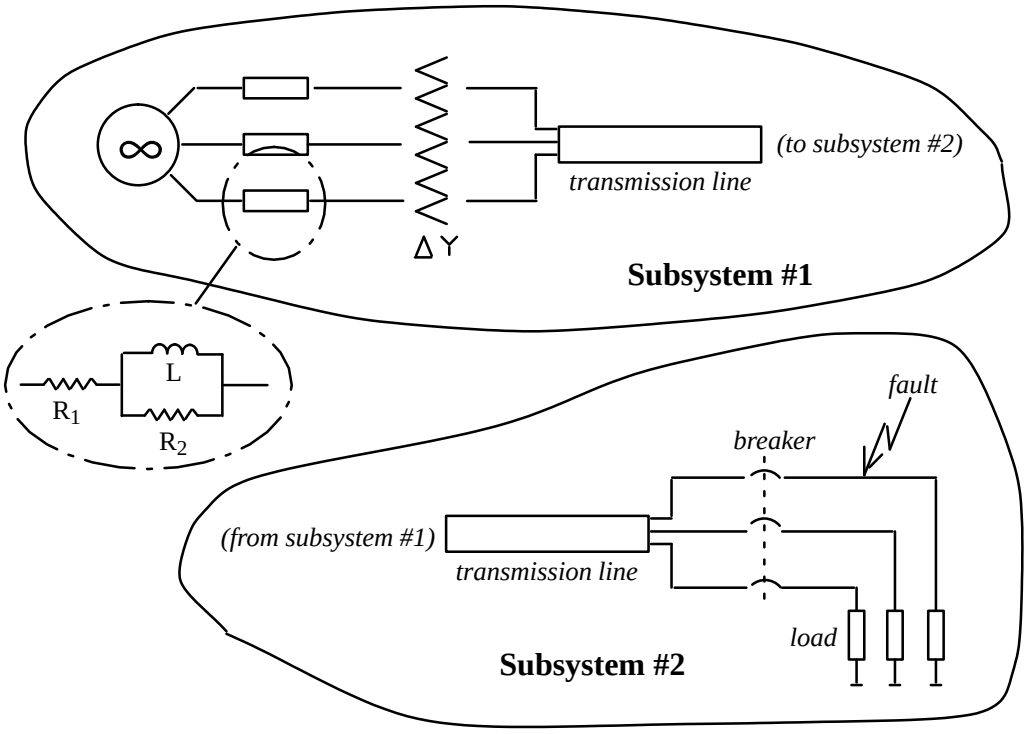

This circuit requires a transmission line for connecting the subsystems together. As the data required for modelling transmission lines is quite extensive, a separate PSCAD module is used to enter the required transmission line information and to create the simulation data for that transmission line.

4.2 CREATING A CASE DIRECTORY

From the FILEMANAGER module, open the "LearningPSCAD" project. Create a new case inside this project entitled "SimpleAC", and then open this case.

Any PSCAD modules started at this point by the FILEMANAGER module will operate from the "`~/PSCAD/fileman/LearningPSCAD/SimpleAC`" directory. Any instances of PSCAD modules still running from the previous chapter will not be operating from this directory, and should be terminated to avoid confusion.

4.3 PREPARING THE TRANSMISSION LINE DATA

The T–LINE module is used to generate the data required by the EMTDC transmission line model. The T–LINE module requires, as input, the physical characteristics of the transmission line. By performing an eigenvalue analysis, the modal impedances, travel times and transformation matrices required by the line model are produced.

To start the T–LINE module, select the [T–LINE] button from the right side of the FILE-MANAGER window.

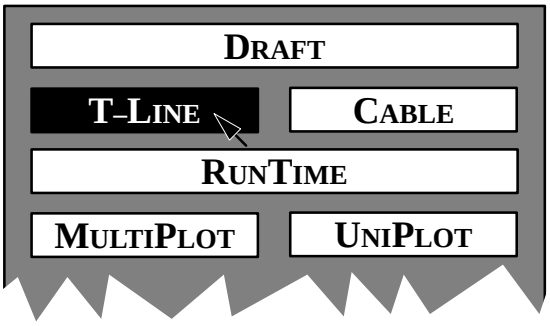

After a few moments, a new window, similar in appearance to the one shown below, will appear on the workstation's monitor.

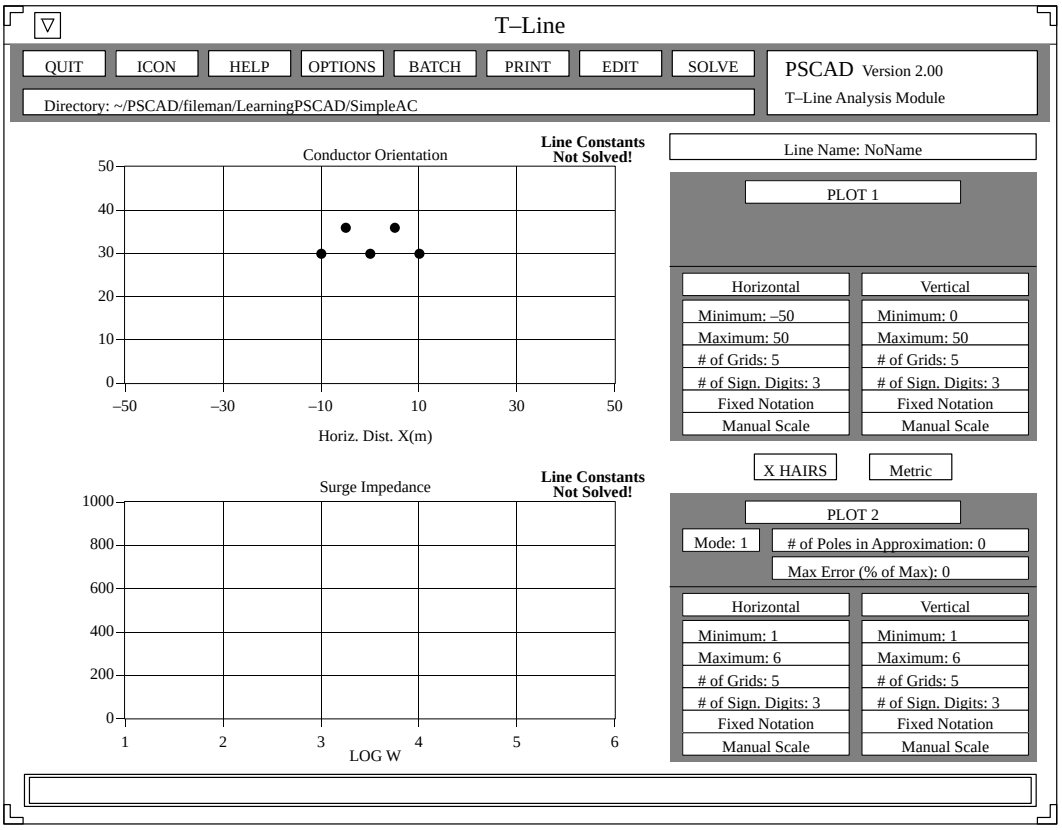

When T–LINE starts, it already contains the data for a default 100 km, three phase transmission line which has a flat configuration, contains two conductors per bundle, and includes two ground wires. This default data will be used for the case at hand.

The “main data”, “conductor data” and “ground wire data” can be seen by selecting the appropriate options from the pull down associated with the EDIT menu button located near the top centre of the T–LINE window.

Once the information regarding the physical characteristics of the transmission line has been entered, the T–LINE module must be instructed as to how the information is to be analyzed, depending on the particular study. Select the CONSTANTS option from the OPTIONS menu to open the “Line Constants Options” form.

The T–LINE module can produce data for either the “Frequency Dependent” or the “Bergeron” transmission line models. The Bergeron model only partially represents the frequency dependence of the line parameters, therfore, it is not as accurate at higher frequencies as the fully frequency dependent model. For this simulation, however, the Bergeron module is sufficient. Select the Bergeron line model by toggling the box marked Freq–Dependant to display Bergeron, and enter a value of 60 for the “Low Frequency” parameter. Close the form by selecting PROCEED.

T–LINE solves the line constants when the SOLVE button is selected.

When the computations have been completed the message box along the bottom edge of the T–LINE window will display the text “Line Constants Completed — Data Must Be Saved Before Compiling in Draft!”. Also, the SAVE option from the BATCH menu will be automatically selected, opening the “Batch Save” form. Specify the name “Flat230” for the batch file.

Both the physical characteristics and the eigenvalue analysis data are stored in the “transmission line batch” file or “`.tlb`” file. When the DRAFT module needs to know the simulation data for a transmission line named “<*name*>”, it will search the current directory, <u>and the parent directories</u>, for a file named “<*name*>`.tbl`”. As such, if the same transmission line model is required in several cases in a project, the transmission line batch file can be placed in the parent project directory instead of in each case directory. Similarly, if it is needed in several projects, it may be placed in the root directory instead of in each project.

Close the T–LINE window by either selecting the ICON or QUIT buttons from the top left hand side of the window.

4.4 PREPARING THE POWER SYSTEM CIRCUIT USING DRAFT

Start the DRAFT module, and draw the circuit drawing depicted below into the drawing canvas. The parameters for each of the components are shown below. Note that the circuit "ends" with a transmission line. Using transmission lines to "break" the circuit into *subsystems* allows EMTDC to solve the network equations more efficiently.

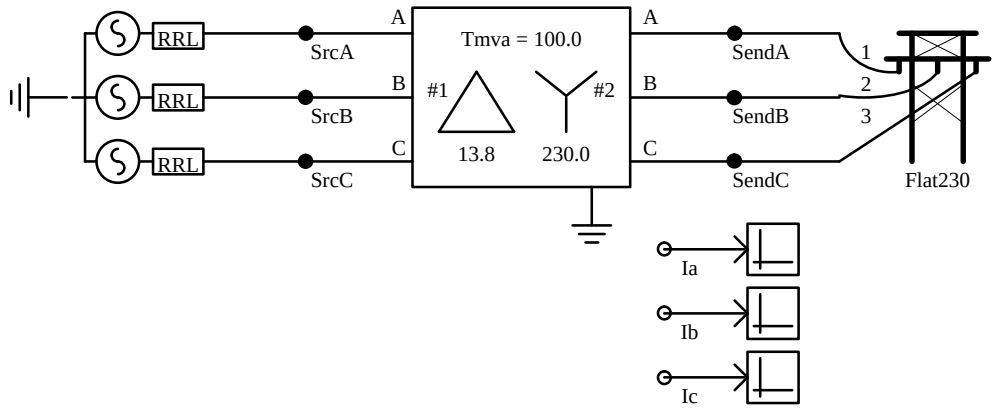

The source component used is a 13.8 kV 100 MVA 3–phase R–R//L source. Instead of using RUNTIME control components to control the source, fixed parameters are used so that the runs are repeatable.

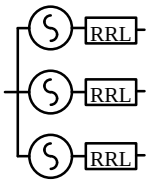

Section: CONFIGURATION			
Name	Source Name	: Src	
Type	Source Impedance Type	: R–R//L	
Ctrl	Source Control	: Fixed	
MVA	System Base MVA (3–phase)	: 100.0	MVA
Vm	Rated Volts (L–L, RMS)	: 13.8	kV
F	Base Frequency	: 60.0	Hz
Tc	Voltage Input Time Constant	: 0.05	sec
ZSeq	Zero Seq. Included	: No	
Imp	Impedance Data Format	: Impedance	
Section: POSITIVE SEQUENCE RRL			
Z1	+'ve Seq. Impedance	: 0.5	Ohms
Phi1	+'ve Seq Imp. Phase Angle	: 80	degs
RN	Harmonic # where phase same as fund.	: 2	
Section: SOURCE INITIAL VALUES			
Es	Initial Source Mag (L–L, RMS)	: 13.8	kV
F0	Initial Frequency	: 60.0	Hz
Ph	Initial Phase	: 0.0	deg
Section: INTERNAL OUTPUT VARIABLES			
P	Name for PU Real Power (+Out)	:	
Q	Name for PU Reactive Power (+Out)	:	
V	Name for PU RMS Source Volts	:	
Theta	Name for Source Angle (degrees)	:	
Ia	Name for Phase A Current(kA)	:	
Ib	Name for Phase B Current(kA)	:	
Ic	Name for Phase C Current(kA)	:	

A 3–phase wye–delta transformer is used to step the voltage up from 13.8 kV to 230 kV. The secondary line currents are assigned to the variables “Ia”, “Ib”, and “Ic”, which will, in turn, be sent to RUNTIME for displaying.

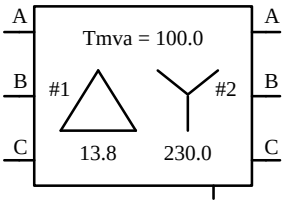

Section: CONFIGURATION			
Name	Transformer Name	: T1	
Tmva	3 Phase Transformer MVA	: 100.0	MVA
f	Base operation frequency	: 60.0	Hz
YD1	Winding #1 (0=Y, 1=Delta)	: 1	
YD2	Winding #2 (0=Y, 1=Delta)	: 0	
Lead	Delta lags Y (1) or Delta leads Y (2)	: 1	
Xl	Positive sequence leakage reactance	: 0.1	p.u.
Ideal	Ideal Transformer Model (0=No,1=Yes)	: 0	
NLL	No load losses	: 0.0	p.u.
Tap	Tap changer winding (0=None)	: 0	
Section: WINDING #1			
V1	Line to line voltage (RMS)	: 13.8	kV
Im1	Magnetizing current	: 1.0	%
Section: WINDING #2			
V2	Line to line voltage (RMS)	: 230.0	kV
Im2	Magnetizing current	: 1.0	%
Section: SATURATION			
Enab	Saturation Enabled (0=No,1=Yes)	: 0	
Sat	Saturation Placed on Winding	: 1	
Xair	Air core reactance	: 0.2	p.u.
Tdc	In rush decay time constant	: 1.0	sec
Xknee	Knee voltage	: 1.25	p.u.
Txk	Time to release flux clipping	: 0	sec
Section: WINDING 1 LINE CURRENTS			
ILA1	Name for Phase A Current (+in,kA)	:	
ILB1	Name for Phase B Current (+in,kA)	:	
ILC1	Name for Phase C Current (+in,kA)	:	
Section: WINDING 1 DELTA CURRENTS			
IAB1	Name for A–>B Winding Current (kA)	:	
IBC1	Name for B–>C Winding Current (kA)	:	
ICA1	Name for C–>A Winding Current (kA)	:	
Section: WINDING 2 LINE CURRENTS			
ILA2	Name for Phase A Current (+in,kA)	: Ia	
ILB2	Name for Phase B Current (+in,kA)	: Ib	
ILC2	Name for Phase C Current (+in,kA)	: Ic	
Section: MONITORING OF FLUX AND MAGN CURRENT			
IMAB	Name for Phase A–>B Magn. Curr. (kA)	:	
IMBC	Name for Phase B–>C Magn. Curr. (kA)	:	
IMCA	Name for Phase C–>A Magn. Curr. (kA)	:	
FLXAB	Name for Phase A–>B FLUX (kWb)	:	
FLXBC	Name for Phase B–>C FLUX (kWb)	:	
FLXCA	Name for Phase C–>A FLUX (kWb)	:	

The transformed voltages are connected to a “transmission line”. Note that the name entered for the transmission line is the same as the name used to save the transmission line data in the previous section.

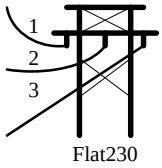

Name	T–Line Name	: Flat230

The source nodes are labelled “SrcA”, “SrcB”, and “SrcC”. Automatic RUNTIME monitoring of the node voltages is enabled.

● SrcA

● SrcB

● SrcC

```
Section: MAIN DATA
    NName  Node Name                          : SrcA
    VBase  Voltage Scaling Factor (L–G)       : 1          kV,peak
    MonV   Plot Voltage in RunTime            : Yes
    MeasV  Measure Voltage in Circuit         : No
    PU     Scale Voltage                      : No
Section: RUNTIME VOLTAGE PLOTTING
    DL     Description                        : Node $NName
    Max    Default Maximum Limit              : 15.0
    Min    Default Minimum Limit              : –15.0
    Units  Units                              : kV
```

```
:          :
:          :
NName  Node Name          : SrcB
```

```
:          :
:          :
NName  Node Name          : SrcC
:          :
:          :
```

The transformer secondary nodes are labelled “SendA”, “SendB”, and “SendC”. Automatic RUNTIME monitoring of the node voltages is enabled.

● SendA

● SendB

● SendC

```
Section: MAIN DATA
    NName  Node Name                          : SrcA
    VBase  Voltage Scaling Factor (L–G)       : 1          kV,peak
    MonV   Plot Voltage in RunTime            : Yes
    MeasV  Measure Voltage in Circuit         : No
    PU     Scale Voltage                      : No
Section: RUNTIME VOLTAGE PLOTTING
    DL     Description                        : Node $NName
    Max    Default Maximum Limit              : 250
    Min    Default Minimum Limit              : –250
    Units  Units                              : kV
```

```
:          :
:          :
NName  Node Name          : SendB
```

```
:          :
:          :
NName  Node Name          : SendC
:          :
:          :
```

The current signals assigned to the variables “Ia”, “Ib” and “Ic” are referenced here in order to direct them to plotting components.

○ Ia

○ Ib

○ Ic

```
Name    Wire Name          : Ia
```

```
Name    Wire Name          : Ib
```

```
Name    Wire Name          : Ic
```

The signals labelled “Ia”, “Ib”, and “Ic” are connected to plot components, which assign a group name and a description for each channel.

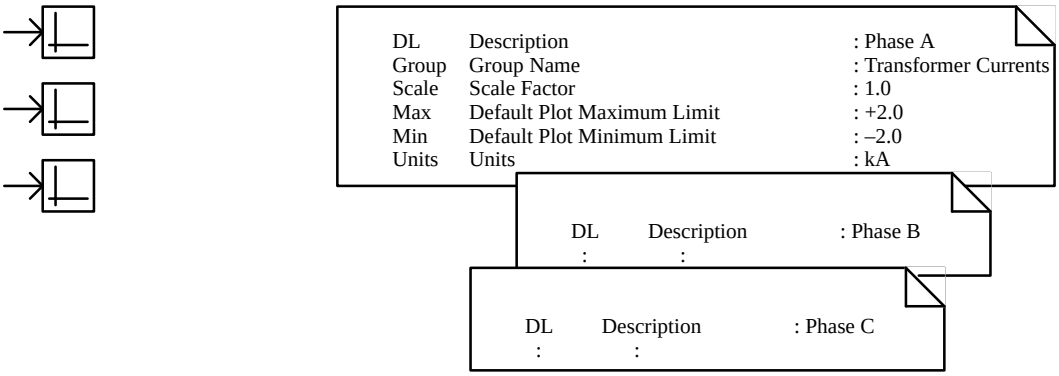

Now, select the PROPERTIES item from the SUBSYSTEM menu. This opens the “Subsystem Properties” form, where the name of the subsystem, and a subsystem comment, may be entered. Enter the subsystem name “Sending End” and select PROCEED.

To enter the second half of the circuit, a new subsystem canvas page must be created. Select ADD from the SUBSYSTEM menu. The “Subsystem Properties” form appears again. Enter the subsystem name “Receiving End” for this new subsystem page. When PROCEED is selected, the new subsystem page is created and is automatically displayed. In future the OPEN item from the SUBSYSTEM menu should be used to change which subsystem is displayed.

Draw the subsystem depicted below into the drawing canvas. The parameters for each of the components are shown below. The sequencing of events here is: apply the fault, open the breakers, clear the fault, and finally re-close the breakers.

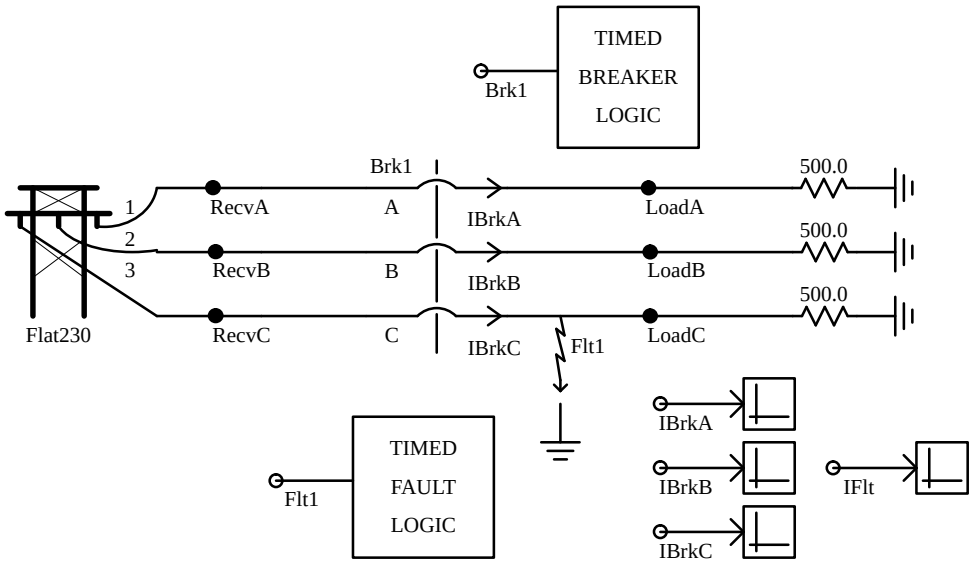

The subsystem begins with the transmission line from the previous subsystem page. Note that the name given to this transmission line is the same name as that given to the transmission line on the first page, establishing a logical connection between these two components.

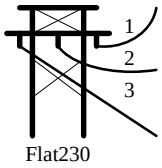

Name	T–Line Name	: Flat230

A three phase breaker, named “Brk1”, is used to interrupt the flow of power when a fault is detected. Names for the breaker currents are assigned so that these currents may be monitored.

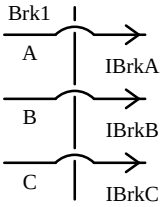

Section: CONFIGURATION			
NAME	Breaker Name	: Brk1	
OPEN	Initial State:	: Closed	
ENAB	Use Pre–Insertion Resistance?	: No	
Section: BREAKER MAIN DATA			
ROFF	Breaker Open Resistance	: 1.0E6	ohms
RON	Breaker Closed Resistance	: 0.01	ohms
OPCUR	Open possible if current flowing?	: No	
Section: BREAKER CURRENT NAMES			
IBRA	Name for Breaker Current, A (kA)	: IBrkA	
IBRB	Name for Breaker Current, B (kA)	: IBrkB	
IBRC	Name for Breaker Current, C (kA)	: IBrkC	

A “Timed Breaker Logic” component is used to control the breaker. At Time=0.26 seconds, this block emits a non–zero signal on the attached wire “Brk1”, which happens to be the same name as the breaker above. This opens the breaker. At T=0.31 seconds, this block then emits a zero signal, and the breaker closes.

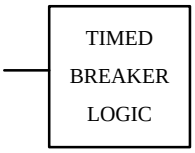

TO	Time to Open Breaker	: 0.26	sec
TC	Time to Close Breaker	: 0.31	sec
REP	Repeat?	: No	

A signal phase fault component, named “Flt1”, is used to fault the power system to ground on the C phase of the circuit. A name for the for the fault current is assigned so that this current may be monitored.

Section: CONFIGURATION			
Name	Fault Name	: Flt1	
Section: MAIN DATA			
ROn	Fault ON Resistance	: 0.01	ohms
ROff	Fault OFF Resistance	: 1.0E6	ohms
Iflt	Name for Fault Current (kA)	: IFlt	

A “Timed Fault Logic” component is used to control the fault. At Time=0.25 seconds, this block emits a non–zero signal on the attached wire “Flt1”, which happens to be the same name as the fault above. This applies the fault. This signal stays on for 0.05 seconds, at which point the block then emits a zero signal which removes the fault.

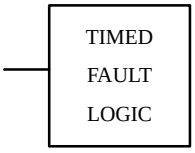

TF	Time to Apply Fault	: 0.25	sec
DF	Duration of Fault	: 0.05	sec
REP	Repeat?	: No	

The transmission line nodes are labelled “RecvA”, “RecvB”, and “RecvC”. Automatic RUNTIME monitoring of the node voltages is enabled.

RecvA

RecvB

RecvC

```
Section: MAIN DATA
   NName  Node Name                          : RecvA
   VBase  Voltage Scaling Factor (L–G)       : 1          kV,peak
   MonV   Plot Voltage in RunTime            : Yes
   MeasV  Measure Voltage in Circuit         : No
   PU     Scale Voltage                      : No
Section: RUNTIME VOLTAGE PLOTTING
   DL     Description                        : Node $NName
   Max    Default Maximum Limit              : 250
   Min    Default Minimum Limit              : –250
   Units  Units                              : kV
```

```
      :          :
      :          :
   NName  Node Name          : RecvB
```

```
      :          :
      :          :
   NName  Node Name          : RecvC
      :          :
      :          :
```

The load nodes are labelled “LoadA”, “LoadB”, and “LoadC”. Automatic RUNTIME monitoring of the node voltages is enabled.

LoadA

LoadB

LoadC

```
Section: MAIN DATA
   NName  Node Name                          : LoadA
   VBase  Voltage Scaling Factor (L–G)       : 1          kV,peak
   MonV   Plot Voltage in RunTime            : Yes
   MeasV  Measure Voltage in Circuit         : No
   PU     Scale Voltage                      : No
Section: RUNTIME VOLTAGE PLOTTING
   DL     Description                        : Node $NName
   Max    Default Maximum Limit              : 250
   Min    Default Minimum Limit              : –250
   Units  Units                              : kV
```

```
      :          :
      :          :
   NName  Node Name          : LoadB
```

```
      :          :
      :          :
   NName  Node Name          : LoadC
      :          :
      :          :
```

Select [PARAMETERS] from the [FILE] menu to open the “File Parameters” form. Enter “A Simple AC Power System” for the circuit title, 50µS for the time–step, 400mS for the finish–time, and 0.5mS for the print–step.

Select [SAVE AS ...] from the [FILE] menu, and specify a file name of “SimpAC” to the save the circuit drawing under.

Finally, select [COMPILE] to compile the circuit drawing. If no errors or warnings are generated, select [ICON] to return to the FILEMANAGER module. If any error or warning messages are generated, investigate the circuit drawing at the points where DRAFT indicates the problems occur at, and ensure the data has been entered correctly. The re–compile and save the circuit.

4.5 PERFORMING THE SIMULATION USING RUNTIME

The case can be run using the same procedure as outlined for the voltage divider circuit from the previous section. Any of the node voltages and breaker contact currents identified for plotting in DRAFT may be monitored using a plot icon from the RUNTIME window.

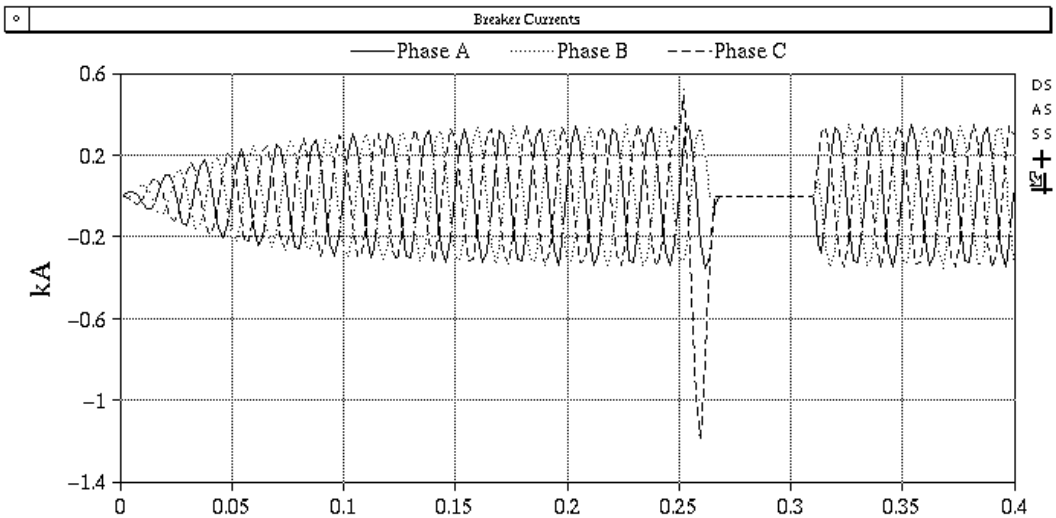

If output files are saved, MULTIPLOT can be used to analysis the data and to print any desired plots.