6 NETWORK FREQUENCY SCAN

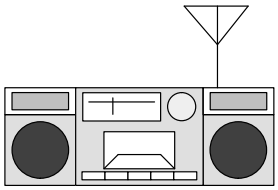

When constructing complex power system models for simulation with electromagnetic transients software, it is often useful to build the model piece by piece. By testing individual pieces of the system model and confirming their correct operation, the user can gain some confidence that the larger model will function correctly. A commonly applied test is to perform a *frequency scan* of the linear portion of the circuit. Frequency scans are especially useful when a DC system is to be connected at a particular bus. Not only can the user confirm that the filters are correctly tuned, but any resonance peaks which may cause maloperation of the DC system can also be found.

The frequency scan technique essentially involves three steps:

- Apply a current injection on the bus of interest, which is a sum of sine waves of magnitude one,
- Measure and record the resultant voltage at that bus,
- Perform a Fourier analysis on the captured waveform using MULTIPLOT.

Since the current injection is of magnitude 1 for each frequency, a frequency scan of the recorded voltage, due to the applied current injection, will actually yield the circuit's impedance magnitude (and phase) as a function of frequency.

$$Z(\omega_n) = \frac{V(\omega_n)}{I(\omega_n)} \qquad \text{and} \quad I(\omega_n) = 1\angle 0, \quad \therefore \quad Z(\omega_n) = V(\omega_n)$$

$$\text{for} \quad \omega_n = 2 \cdot n \cdot \pi \cdot f_o$$

The use of a RUNTIME *snap–shot* to assist in performing a frequency scan, after the system has achieved steady–state, is also described in this chapter.

6.1 FREQUENCY SCAN OF A SERIES RLC BRANCH

In order to demonstrate the general frequency scan procedure, an analysis of a series RLC branch (tuned filter) is presented. Three steps are required to perform this analysis. First, the circuit to be studied must be created, and a "frequency scan helper component" connected to it. Second, the circuit must be simulated. Finally, the results of the simulation are subjected to a Fourier analysis.

6.1.1 Creating the Circuit

Create a "FreqScan" case under the "LearningPSCAD" project, enter that case, and start a new DRAFT module. Draw the following circuit.

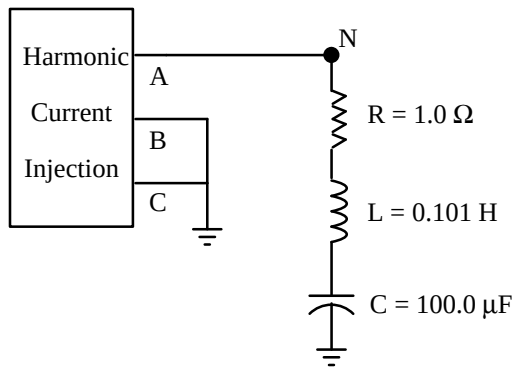

The RLC values were chosen so that the filter frequency is 50 Hz:

$$Fr = \frac{1.0}{2\pi\sqrt{L*C}} = 50.0 \text{ Hz}$$

The "Harmonic Current Injection" component injects currents which are sums of positive, zero, or negative sequence sine waves. Connecting the B and C phases to ground allows the use of this component with single phase circuits. The parameters for the component are shown below:

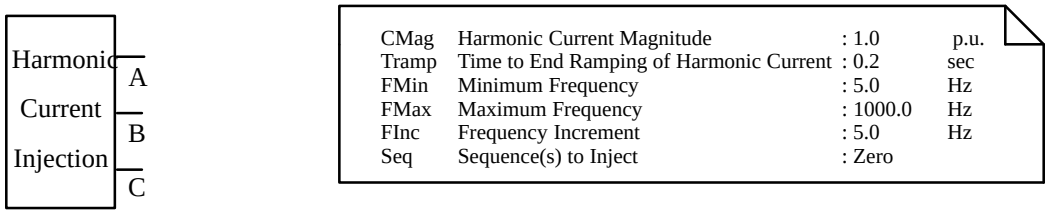

It is convenient to choose a frequency increment of 5 Hz since it requires data to be captured over a time span as short as 0.2 seconds ($^{1}/_{5Hz}$). A Fourier analysis of the phase A current injection over 0.2 seconds would produce the following:

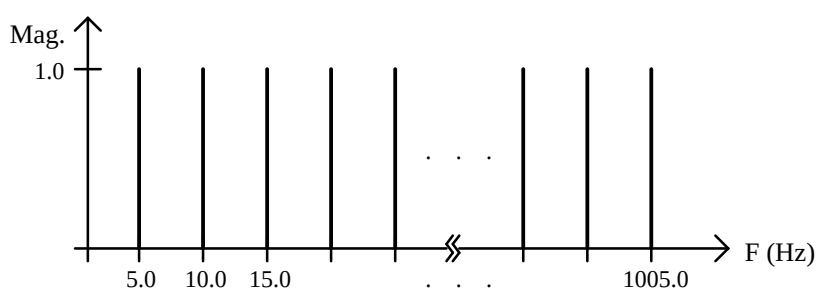

If the user choses a 1 Hz frequency increment, a time span of 1 second ($^{1}/_{1Hz}$) would be required. In that case, the number of data points which must be captured and analysed would become excessive.

To obtain accurate impedance profiles at high frequencies, the selection of the time–step is important. In practice, it is recommended that at least ten points be computed for one cycle of the highest frequency of interest. Thus, using a time–step of 50.0µs, a maximum frequency range of 1–2 kHz can be accurately extracted.

It is important to note that for the Fourier analysis to be successful, the user must store each computed data point. By setting the print–step equal to the time–step, every computed point will be saved to the output file.

The system should be in steady–state when the analysis is performed. In this case, 0.4 seconds is sufficient for reaching steady–state and the analysis can be performed of the range from 0.4 to 0.6 seconds.

Select FILE –> PARAMETERS to open the following form, and enter the above information in this form.

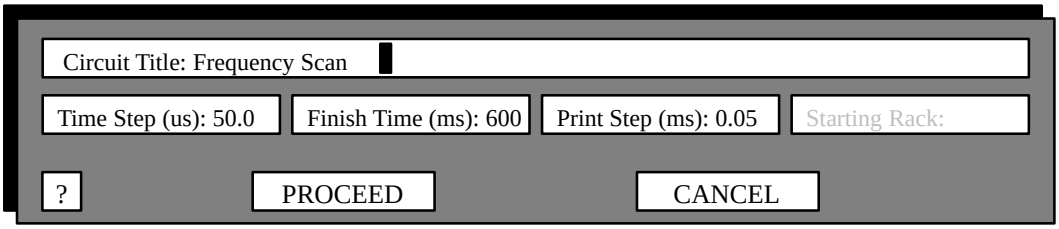

Save this circuit under the name “FilterBranch” and compile the circuit.

A warning message will appear: “*12000 output points will be generated. Over 2000 is considered excessive.*”

Note that only the data from 0.4 seconds to 0.6 seconds is required for the analysis. Saving all 12000 data points is, in fact, excessive, and DRAFT generates a warning to this effect. Instead, the simulation may be run, with-out writing an output file, to shortly before 0.4 seconds, and a “*snap–shot*” taken. The simulation may then be started from the snap–shot and run, writing an output file, to 0.6 seconds.

Change the finish time to 400 mS, and re–compile the case. Note that a warning message will still be generated, but since no output file will be requested by RUNTIME, the warning can be safely ignored.

6.1.2 Performing the Simulation

Start a RUNTIME module and load the "FilterBranch" batch file. A plot component may be created to monitor the node voltage.

To instruct RUNTIME to write a snapshot at 0.38 seconds, and to not write an output file, the following steps must be taken:

- Open the SNAP ⇒ SETUP form, and specify a "Snapshot Type" of Single. Enter a "Time to First Snapshot" of 0.38 seconds, and a "Filename" of "FilterBranch.snp"
- Open the OUTPUT ⇒ SETUP form and toggle Write Output File to No Output File.

At this point, the "FilterBranch" batch file should be saved, so that if the simulation is needed to be re–run from time=0.0 seconds, it may be easily done.

Start the run, and when it finishes, copy back the snapshot file which was created.

To continue the run from the snapshot, writing an output file, and not taking another snapshot, the following steps must be taken:

- Open the OUTPUT ⇒ SETUP form, and toggle No Output File to Write Output File. Enter a "Filename" of "FilterBranch.out"
- Open the SNAP ⇒ SETUP form, and select a "Snapshot Type" of None.
- Open the INPUT ⇒ SETUP form, and select "Start From" SnapShot. Enter "FilterBranch.snp" for the "Snapshot File" entry, and toggle the Re–label Time From 0.0 selection toggle to the Start time = xx (from snapshot file) state. Finally, enter a "New Finish Time" of 0.6 seconds.

Do not re–label time to 0.0 when performing frequency scans using snapshot files. Resetting time to 0.0 will result in a loss of phase information. This will cause the wrong impedance phase to be output from the Fourier analysis.

At this point, a new batch file, such as "FilterBranchSnap", should be saved, so that if the simulation is needed to be re–run from the snapshot, it may be easily done.

Start the run again, and when it finishes, copy back the output file.

6.1.3 Analyzing the Results

The MULTIPLOT module should now be started. Select CREATE ⇒ GRAPH from the top menu to add a graph to the current page. Move the cursor over the graph and press and hold the first mouse button, which will display the *graph menu*.

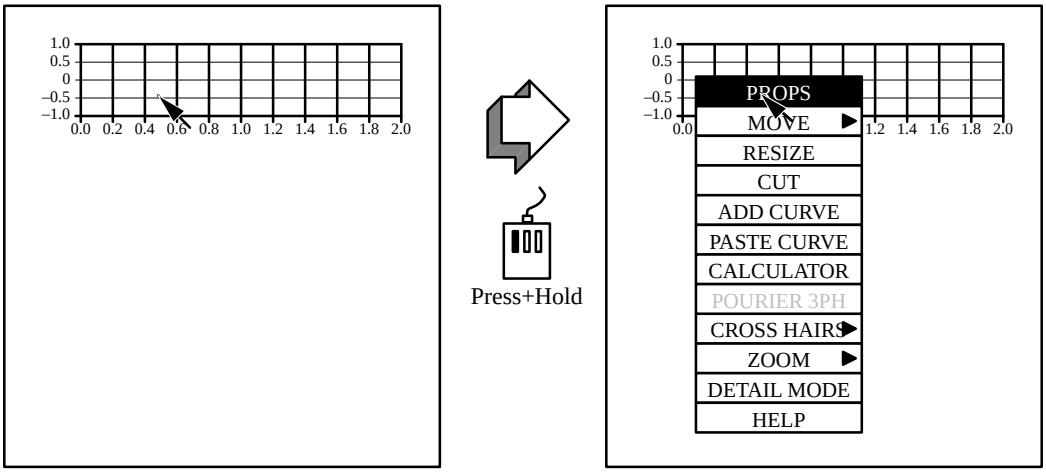

Select ADD CURVE from this menu to display the following form. Fill in the form with the indictated entries.

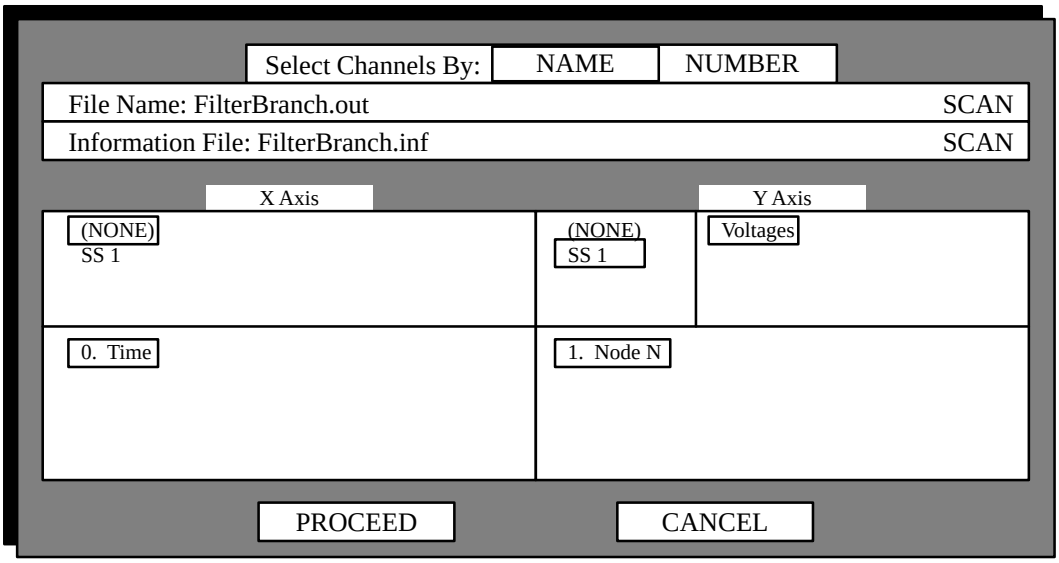

When PROCEED is selected to close the form, the indicated curve will be added to the graph.

Curve labels must be visible to access the curve menu. Pressing 'L' toggles them on and off.

Fourier analysis can now be performed on the curve. Point to the curve label on the graph, and press and hold the first mouse button. If the cursor is properly positioned on the curve label, the *curve menu* will appear.

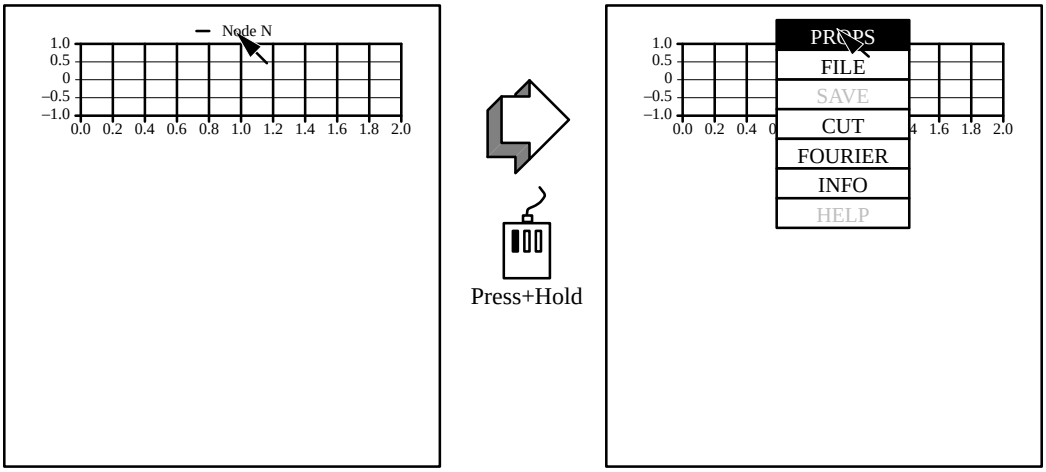

Selecting the FOURIER item opens the "Fourier Analysis" form, show below.

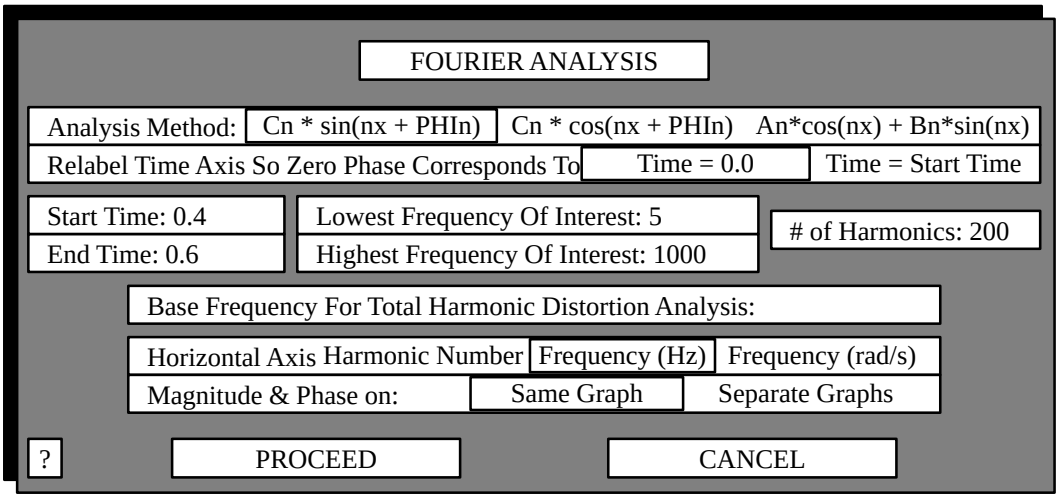

Since the harmonic current injection component constructs the injection using a series of sine terms, a Fourier sine series (Cn*sin(nx+PHIn)) should be requested in the above form so as to ensure that the correct magnitude and phase are computed.

The start and end times default to the horizontal range, currently visible. Change the times to 0.4 seconds and 0.6 seconds respectively. Notice how the lowest frequency of interest changes to 5 hertz ($^{1}/_{0.2sec}$).

Enter 200 for the number of harmonics. Notice how the highest frequency of interest changes to 1000 hertz (5 Hz * 200).

The output of the fourier analysis can be displayed along a horizontal axis labelled by *harmonic numer* (0 to 200), in hertz (0 to 1000), or in radians/second, whichever is most convenient. The default is to use hertz.

The "Base Frequency For Total Harmonic Distortion Analysis" parameter is used when the input is a distorted signal with a particular base frequency. An example is a 60 hertz signal with a 3rd, 5th, and 7th harmonics super–imposed on it. Here, the analysis is meaningless, so the parameter should be left blank.

Select PROCEED to perform the Fourier analysis. As the analysis proceeds, the message box at the bottom of the module darkens from left to right. When the analysis is complete, a new graph appears on the page with a magnitude curve and a phase curve representing the Fourier analysis of the signal. Note the impedance minimum at 50 hertz, the frequency of the filter branch.

It is sometimes useful to separate the magnitude and phase curve information onto two separate graphs. To do this, follow the steps below:

- Create another graph for the phase information to appear on.
- Move the pointer over the phase curve label, and press and hold the first mouse button. Select CUT from the *curve menu* which appears.
- Move the pointer over the new graph, and press and hold first mouse button. Select PASTE CURVE from the *graph menu* which appears.

Alternately, the "Magnitude & Phase on:" parameter may be set to "Separate Graphs" instructing MULTIPLOT to create two new graphs instead of one.

Using the *graph menu* PROPS form, and the *curve menu* PROPS form, the user may alter the limits, grid lines, markers, etc., of the graph/curve to achieve the desired appearance.

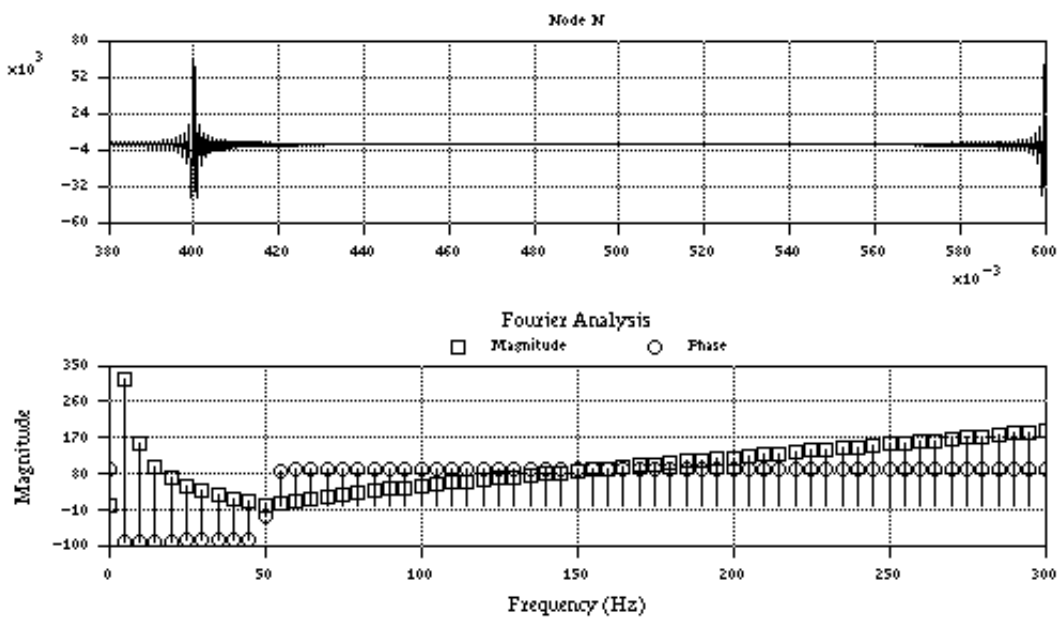

6.2 FREQUENCY SCAN OF A HVDC SYSTEM COMMUTATING BUS

As a more realistic example, the following circuit may be subjected to a frequency scan. This circuit (`Tutorial/FreqScan/RealSystem.dft`) is part of the sending end of a 12 pulse HVDC power system model from the next chapter of this manual.

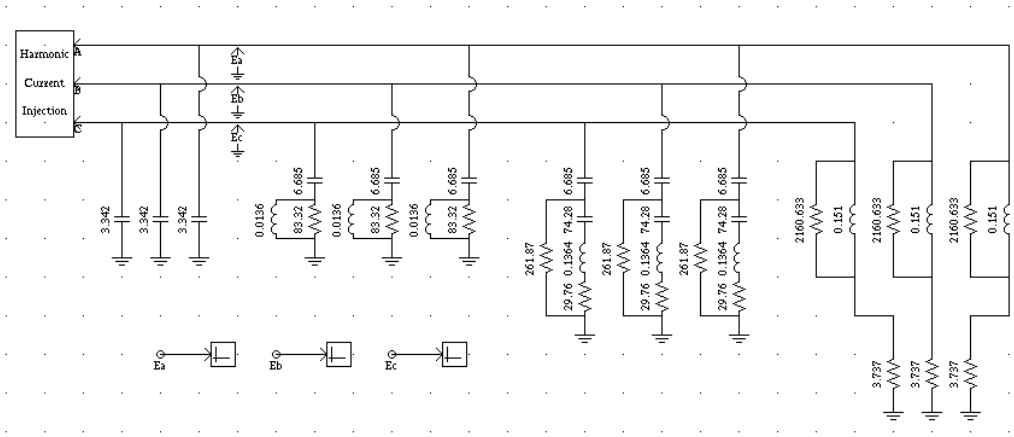

The "Harmonic Current Injection" component used here injects <u>positive, zero, and negative sequence</u> harmonics from 5 Hz to 1000 Hz in increments of 5 Hz.

Use a 50µS time–step and print–step for this circuit, and a finish time of 400 mS. Using RUNTIME, simulate the circuit and take a snap–shot at 0.38 seconds. Re–run the case from the snap–shot to 0.6 seconds, and write an output file.

"FOURIER 3PH" is only enabled if 3 curves are on a graph.

In MULTIPLOT, create a graph, and load the three node voltages on to that plot. From that graph's *graph menu*, select [FOURIER 3PH] to perform a three phase fourier analysis.

Perform a "C_n * sin(nx + ϕ_n)" analysis from 0.4 seconds to 0.6 seconds, using 200 harmonics. Leave the harmonic distortion parameter blank. Specify the horizontal axis to be labelled in hertz, and separate the magnitude and phase information on to separate graphs.

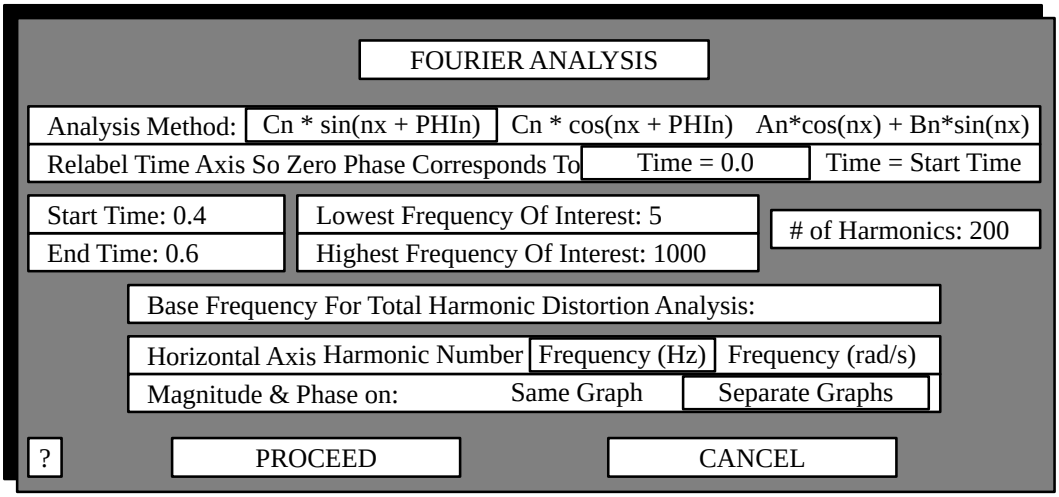

MULTIPLOT will create two graphs: one for the positive, zero, and negative sequence magnitude curves; one for the positive, zero, and negative sequence phase curves.

For this system, the positive, zero and negative sequences are all identical.

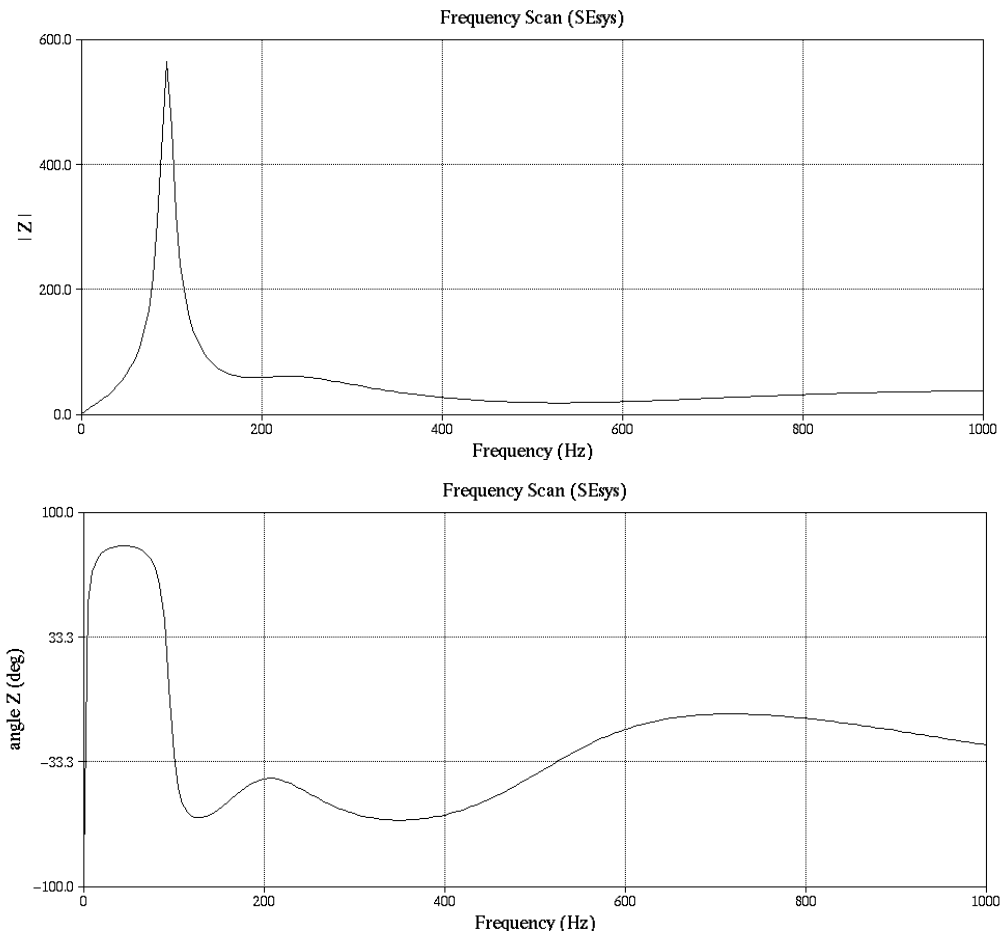

6.3 FREQUENCY SCAN RESTRICTIONS

Frequency scan techniques are usually applied only to networks which <u>do not include</u> *active* or *non–linear* components such as:

- sources
- machines
- transformers with saturation
- breakers, switches or surge arresters.

For a source model, only its internal impedance should be represented, and the voltage source magnitude should be set to 0.0. In the case of a machine model, the user may choose to replace the machine with a shunt impedance equal to the machine's sub–transient reactance in ohms.