NO.	REVISION	BY	CH	SUP	APPROVED	DATE
1	REVISED PER ECN NO.47851	BP	MK	JS	J.CHRZANOWSKI	7/23/03

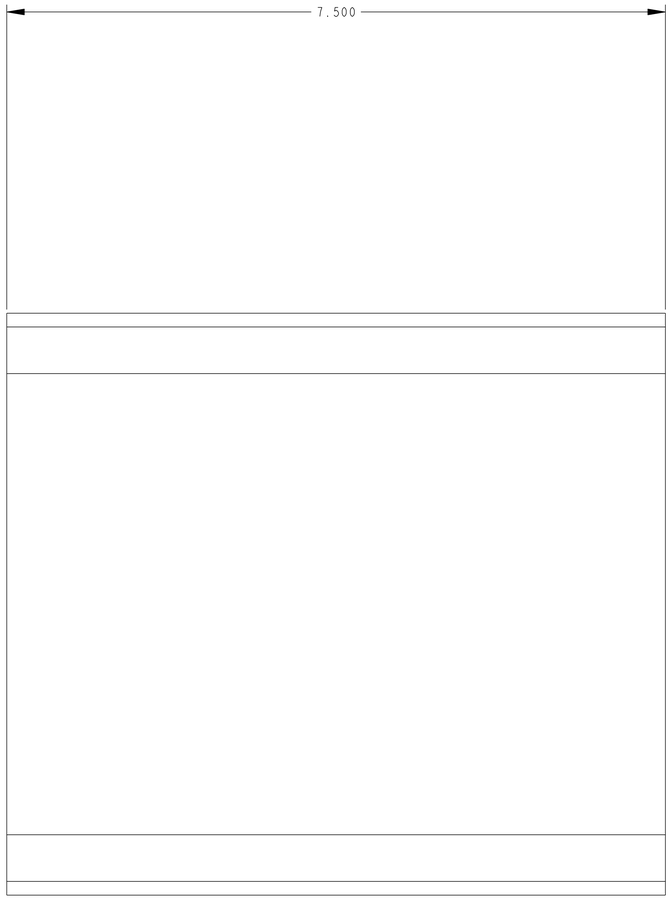

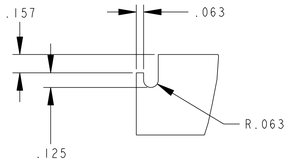

DETAIL B
SCALE 2.000

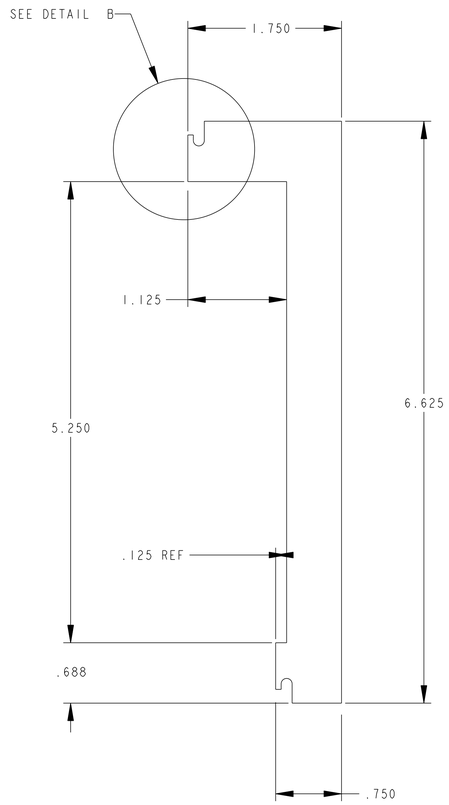

FLAG BOX SIDE (1)
MAKE FROM 1 3/4" TH'K MATERIAL
NO. REQ'D = 96

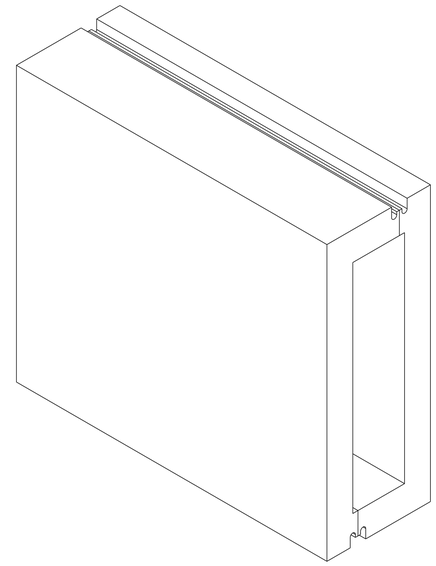

OUTER FLAG BOX
WELDMENT PRIOR TO MACH.
ISOMETRIC

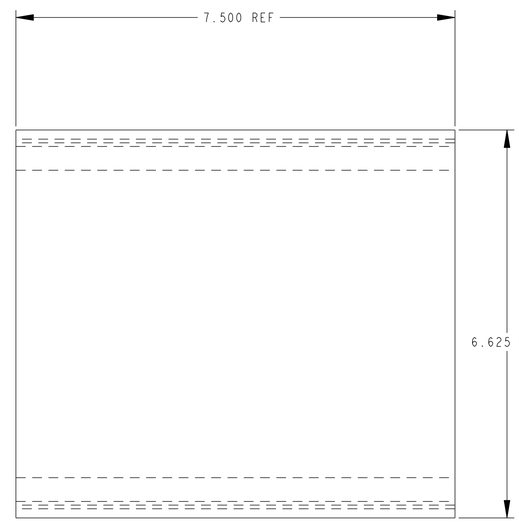

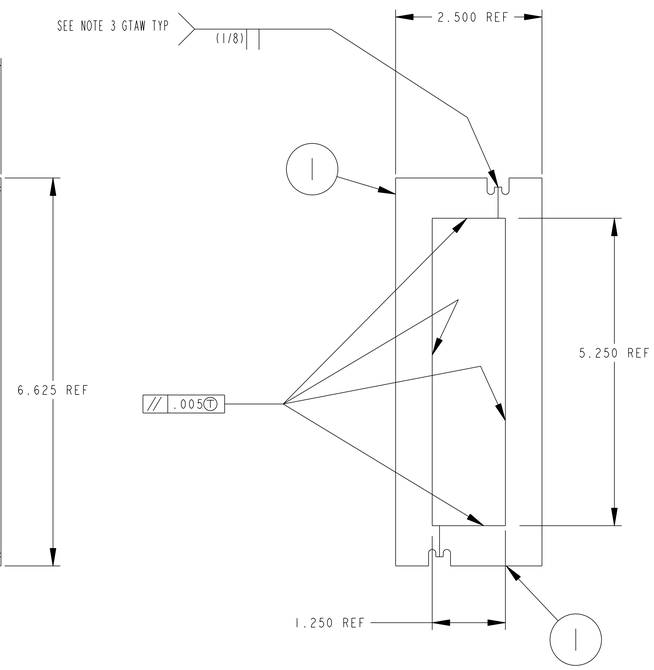

OUTER FLAG BOX
WELDMENT
NO. REQ'D = 48

NOTES:

1. WELDING SHALL BE PERFORMED IN ACCORDANCE WITH THE REQUIREMENTS OF ASME B31.3 AND PPPL PROCEDURE NO. EM-002. VISUAL WELD INSPECTION SHALL BE PERFORMED IN ACCORDANCE WITH THE ACCEPTANCE CRITERIA OF ASME B31.3 CATEGORY D.
2. REFERECE PERMEABILITY USING SEVERN GUAGE:

BASE MATERIAL	1.05 Mu
FABRICATED PART	1.05 Mu
WELD	1.2 Mu

3. USE GUAGE BLOCKS FOR ALIGNMENT OF WELDMENT.

		2	1	THIS DWG	FLAG BOX SIDES SEE DETAIL	304SS
		--	----	THIS DWG	OUTER FLAG BOX WELDMENT/FINAL MACHINING	----
03	02	01	PART NO.	DRAWING NO	NOMENCLATURE OR DESCRIPTION	MATERIAL

ASSY QTY — PARTS LIST

COMPUTER GENERATED DRAWING MANUAL CHANGES NOT PERMITTED
Pro E
DO NOT VERIFY INFORMATION BY SCALING DRAWING

CENTRAL FILES:
UNLESS OTHERWISE SPECIFIED
DIMENSIONS ARE IN INCHES
MACHINE SURFACES 125
BREAK SHARP EDGES .005/.020
TOLERANCES NON-CUMULATIVE

NEXT ASSEMBLY

DECIMAL-INCH		FRACTIONS	
.X	±.100	0°-12°	±1/16
.XX	±.030	12°-72°	±1/8
.XXX	±.005	72°-120°	±1/4
ANGULAR	±0°-15'	OVER 120°	±1/2

PRINCETON PLASMA PHYSICS LABORATORY
PRINCETON UNIVERSITY
NATIONAL SPHERICAL TORUS EXPERIMENT
TF CORE
OUTER FLAG BOX
WELDMENT AND FINAL MACHINING

DIV: MECH. ENG. | DATE: 6/25/03 | CADD FILE: E-DC1292 .DRW
ENGCHRZANOWSKI | APPROVED J.CHRZANOWSKI | E-DC1292
DSN: B.PAUL
CHK: M. KALISH | CHK MK | SUPV JS | SHEET 1 OF 2 | REV 1

WELDING ENGINEER
APPVD: R.PARSELLS DATE 6/26/03

NSTX-E-DC1292

NO.	REVISION	BY	CH	SUP	APPROVED	DATE
1	REVISED PER ECN NO. 4785	BP	MK	JS	J.CHRZANOWSKI	7/23/03

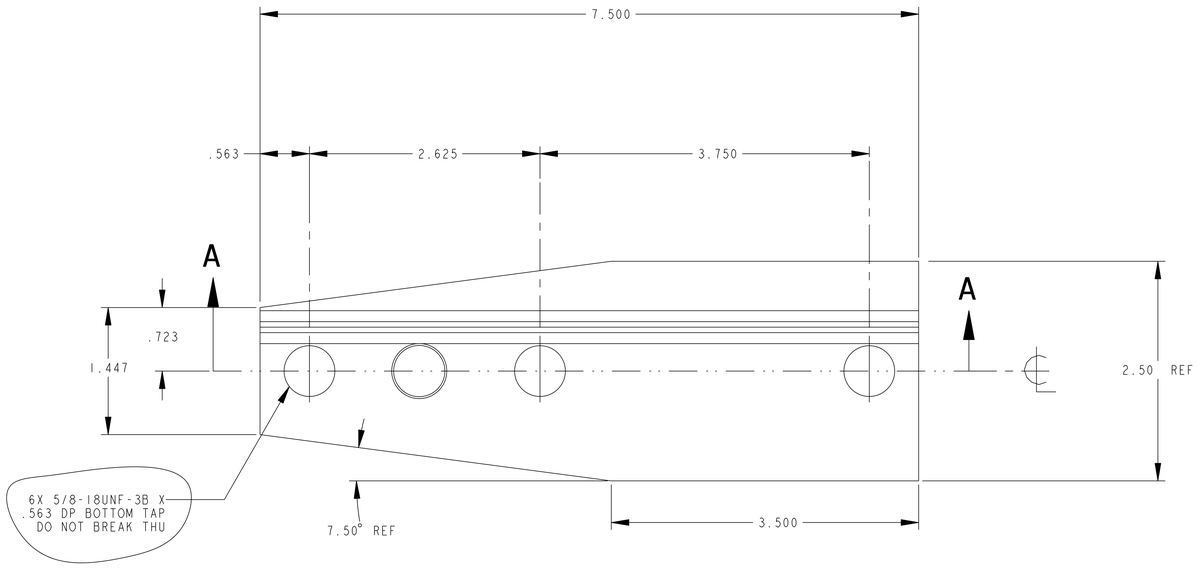

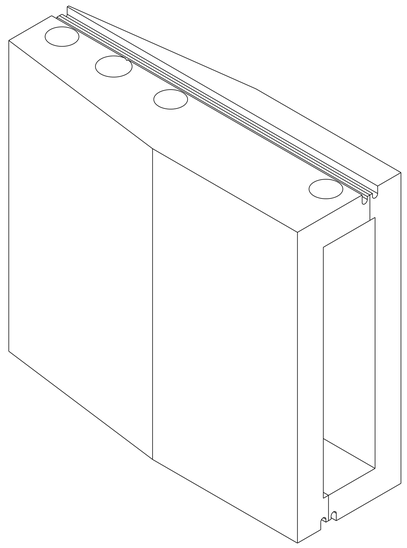

OUTER FLAG BOX ISOMETRIC

SCALE 1.000

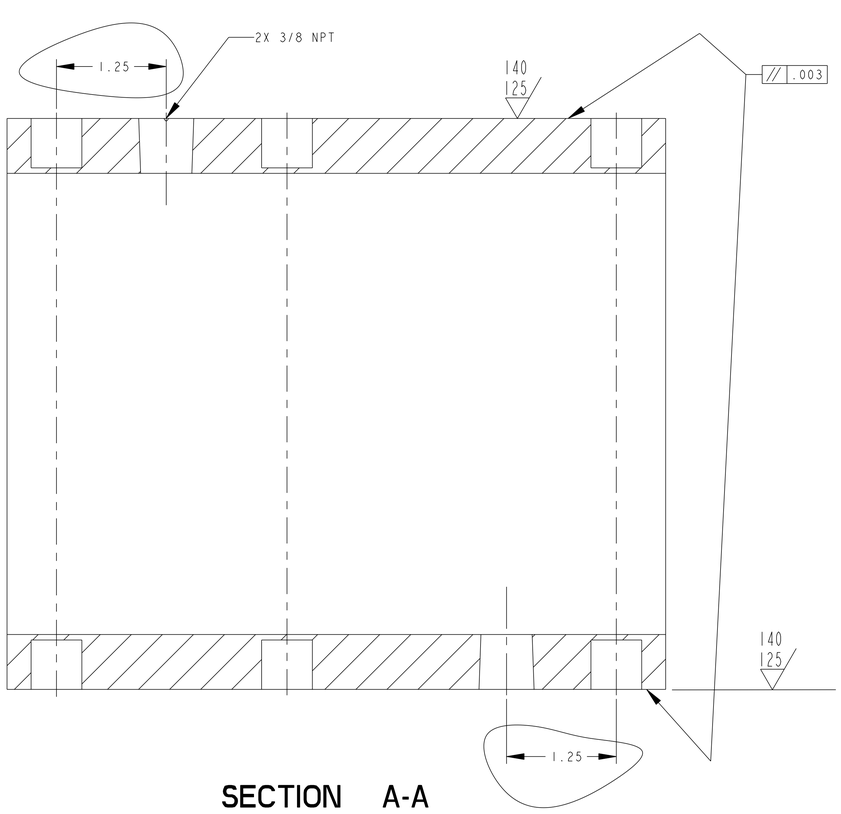

SECTION A-A

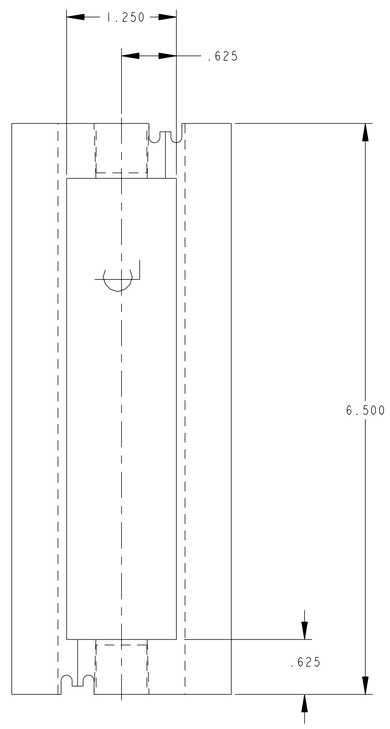

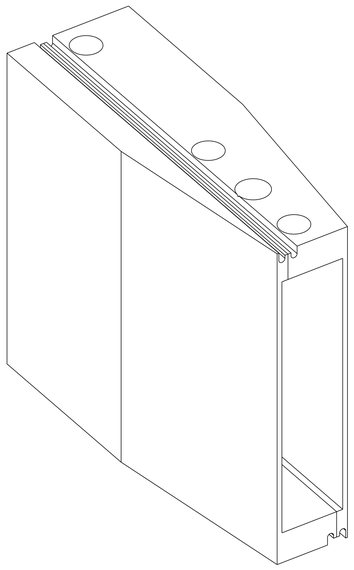

(01) **OUTER FLAG BOX FINAL MACHINING**

NO REQ'D = 48

WELDING ENGINEER
APPVD: _____ DATE

COMPUTER GENERATED DRAWING MANUAL CHANGES NOT PERMITTED	CENTRAL FILES: UNLESS OTHERWISE SPECIFIED	PRINCETON PLASMA PHYSICS LABORATORY PRINCETON UNIVERSITY NATIONAL SPHERICAL TORUS EXPERIMENT	
Pro E	DIMENSIONS ARE IN INCHES MACHINE SURFACES 125	TF CORE OUTER FLAG BOX WELDMENT AND FINAL MACHINING	
DO NOT VERIFY INFORMATION BY SCALING DRAWING	BREAK SHARP EDGES .005/.020		
	TOLERANCES NON-CUMULATIVE	DIV: MECH. ENG.	DATE: 6/25/03 — CADD FILE: E-DC1292 .DRW
NEXT ASSEMBLY	DECIMAL-INCH: .X ±.100, .XX ±.030, .XXX ±.005, ANGULAR ±0°-15'; FRACTIONS: 0°-12° ±1/16, 12°-72° ±1/8, 72°-120° ±1/4, OVER 120° ±1/2	ENG: J.CHRZANOWSKI DSN: B.PAUL CHK: M. KALISH	APPROVED: J.CHRZANOWSKI — CHK MK, SUPV JS — E-DC1292 — SHEET 2 OF 2 — REV 1

EMI

NSTX-E-DC1292