NO.	REVISION	BY	CH	SUP	APPROVED	DATE
1	REVISED PER ECN NO.4785	BP	MK	JS	J.CHRZANOWSKI	7/23/03

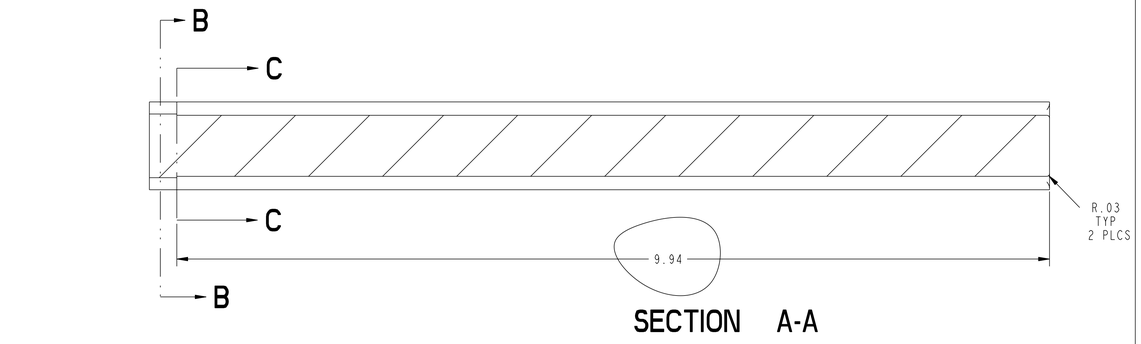

SECTION A-A

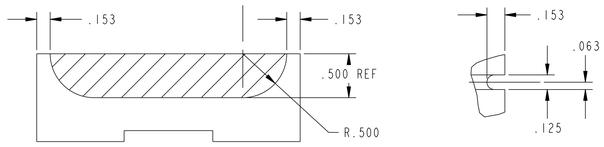

SECTION D-D

DETAIL E
SCALE 2.000

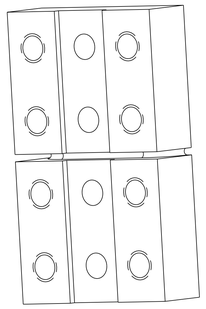

SLOT ISOMERTIC
SCALE 1.000

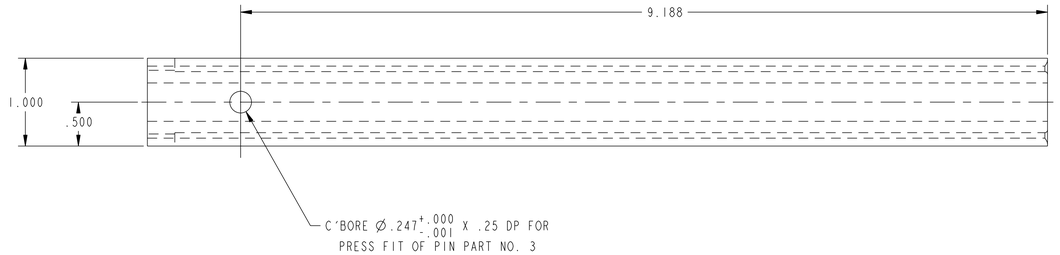

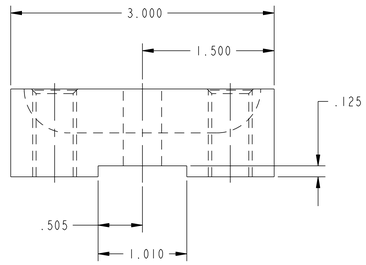

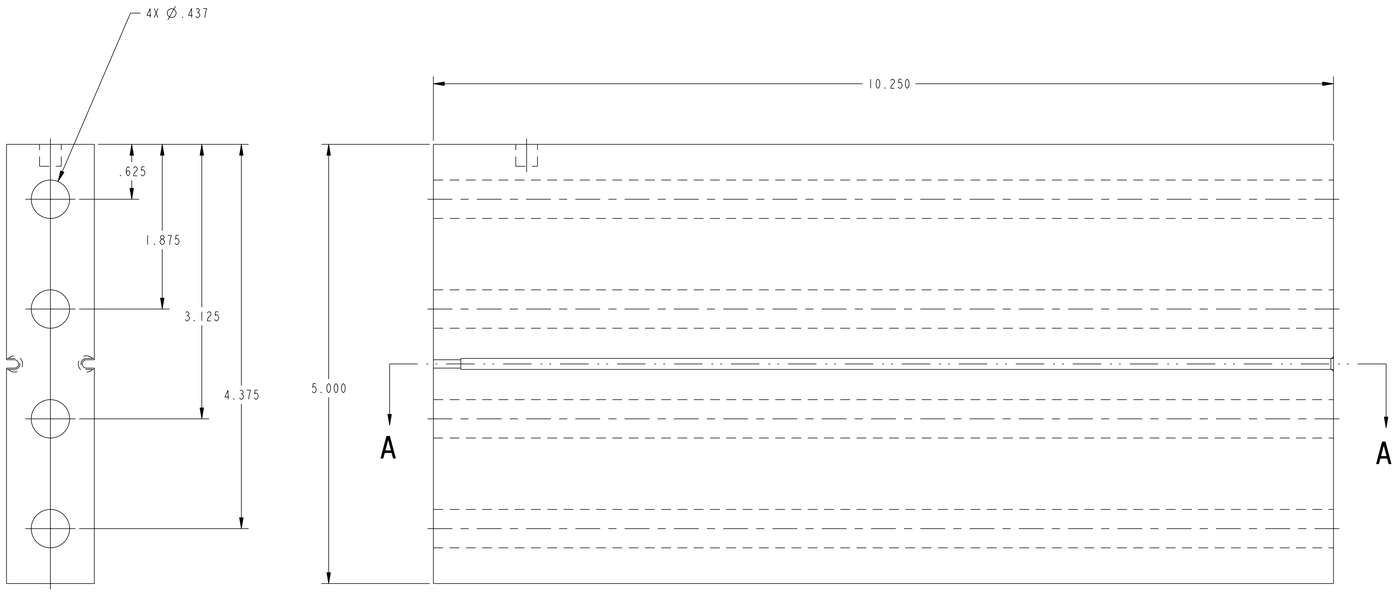

PART 1
NO. REQ'D : 24

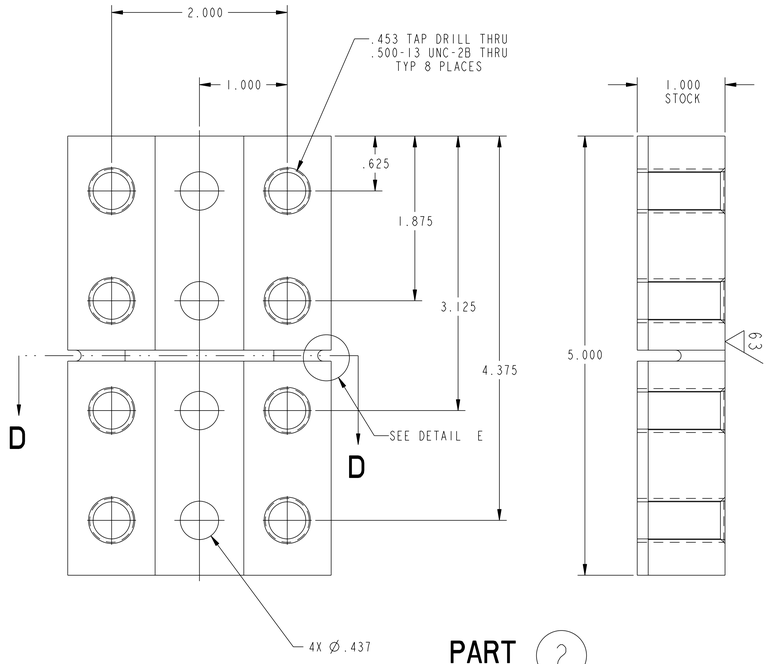

PART 2
NO. REQ'D : 24

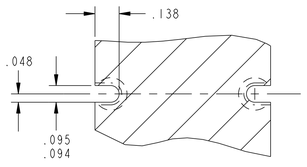

SECTION B-B
SCALE 3.000

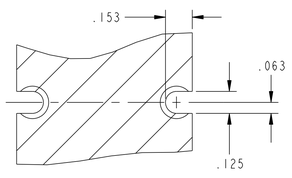

SECTION C-C
SCALE 3.000

		8	4	COMM	KEENSERT NO. KNL616 SEE SHEET 2	303 CRES
		1	3	THIS DRW	FLAG ALIGNMENT PIN SEE SHEET 2	304 SS
		1	2	THIS DRW	FLAG END	COPPER CDA 104,105,OR 107
		1	1	THIS DRW	INNER FLAG LEG	COPPER CDA 104,105,OR 107
		X	---	THIS DRW	INNER FLAG ASSEMBLY SEE SHEET 2	------
03	02	01	PART NO.	DRAWING NO	NOMENCLATURE OR DESCRIPTION	MATERIAL

ASS QTY — PARTS LIST

COMPUTER GENERATED DRAWING
MANUAL CHANGES NOT PERMITTED

Pro E

DO NOT VERIFY INFORMATION BY SCALING DRAWING

NEXT ASSEMBLY

CENTRAL FILES:
UNLESS OTHERWISE SPECIFIED
DIMENSIONS ARE IN INCHES
MACHINE SURFACES 125
BREAK SHARP EDGES .005/.020
TOLERANCES NON-CUMULATIVE

DECIMAL-INCH		FRACTIONS	
.X	±.100	0°-12°	±1/16
.XX	±.030	12°-72°	±1/8
.XXX	±.005	72°-120°	±1/4
ANGULAR	±0°-15'	OVER 120°	±1/2

PRINCETON PLASMA PHYSICS LABORATORY
PRINCETON UNIVERSITY
NATIONAL SPHERICAL TORUS EXPERIMENT
TF CORE
INNER FLAG ASSEMBLY
WELDMENT AND FINAL MACHINING

DIV: MECH. ENG. | DATE: 6/25/03 | CADD FILE: E-DC1293 .DRW
ENG: J. CHRZANOWSKI
DSN: C. PRINISKI B.PAUL
CHK: M. KALISH
APPROVED: J.CHRZANOWSKI | CHK MK | SUPV JS
E-DC1293
SHEET 1 OF 2 | REV 1

WELDING ENGINEER
APPVD: _____ DATE

NSTX-E-DC1293

NO.	REVISION	BY	CH	SUP	APPROVED	DATE
1	REVISED PER ECN NO.4785	BP	MK	JS	J.CHRZANOWSKI	7/23/03

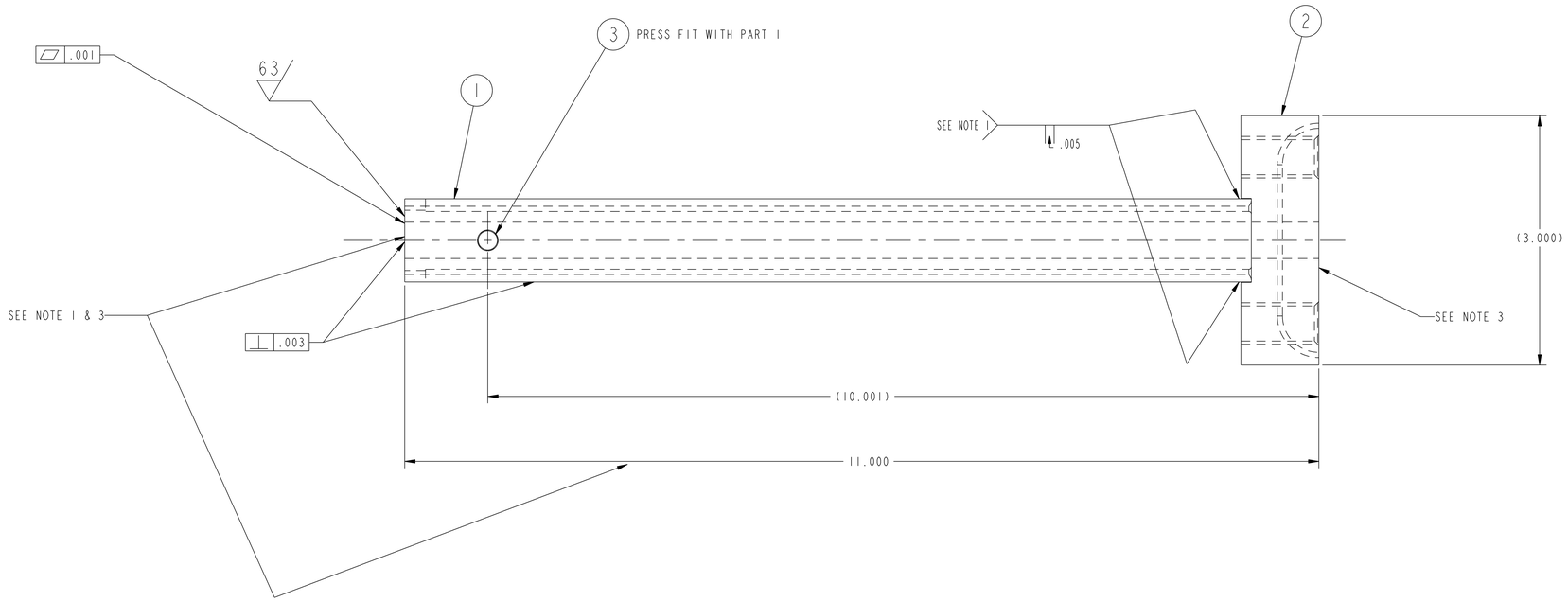

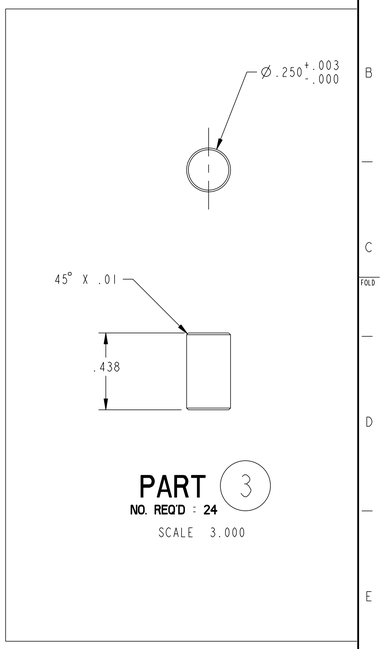

PART 3
NO. REQ'D : 24
SCALE 3.000

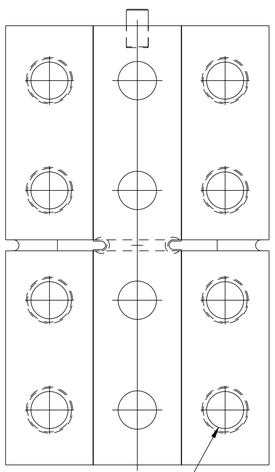

4 SEE NOTE 2

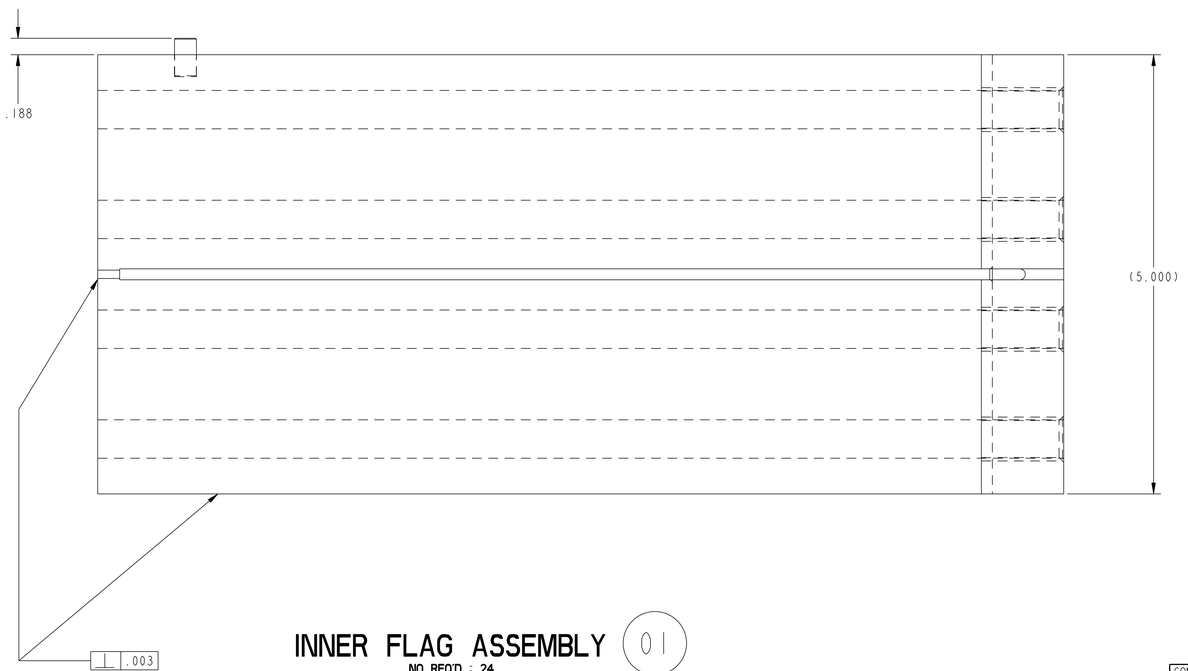

INNER FLAG ASSEMBLY 01
NO REQ'D : 24

NOTES

1. MACHINE ELECTRICAL CONTACT FACE OF PART 1 TO 63 FINISH AFTER BRAZING OF PARTS 1 & 2.
2. KEENSERTS TO BE INTALLED BEFORE ELECTRICAL CONTACT FACES ARE SILVER PLATED. KEENSERTS ARE TO BE RECESSED .06 BELLOW ELECTRICAL CONTACT FACE.
3. SILVER PLATE ELECTRICAL CONTACT FACES.
4. INSULATION TO BE (2) HALF-LAPPED LAYERS OF KAPTON TAPE
5. BRAZING SHALL BE PERFORMED IN ACCORDANCE WITH THE REQUIREMENTS OF PPPL PROCEDURE NO. EM-002.

NSTX-E-DC1293

WELDING ENGINEER
APPVD: R.PARSELLS DATE 6/26/03

COMPUTER GENERATED DRAWING MANUAL CHANGES NOT PERMITTED	CENTRAL FILES: UNLESS OTHERWISE SPECIFIED	PRINCETON PLASMA PHYSICS LABORATORY PRINCETON UNIVERSITY NATIONAL SPHERICAL TORUS EXPERIMENT TF CORE INNER FLAG ASSEMBLY WELDMENT AND FINAL MACHINING	
Pro E	DIMENSIONS ARE IN INCHES MACHINE SURFACES 63		
DO NOT VERIFY INFORMATION BY SCALING DRAWING	BREAK SHARP EDGES .005/.020		
	TOLERANCES NON-CUMULATIVE	DIV: MECH. ENG. / DATE: 6/25/03	CADD FILE: E-DC1293 .DRW
NEXT ASSEMBLY	DECIMAL-INCH: .X ±.100, .XX ±.030, .XXX ±.005, ANGULAR 10°-15° FRACTIONS: 0°-12° ±1/16, 12°-72° ±1/8, 72°-120° ±1/4, OVER 120° ±1/2	ENG: J. CHRZANOWSKI DSN: C. PRINISKI, B.PAUL CHK: M. KALISH	APPROVED: J.CHRZANOWSKI CHK MK, SUPV JS
			E-DC1293
			SHEET 2 OF 2 REV 1

EMI