NO.	REVISION	BY	CH	SUP	APPROVED	DATE

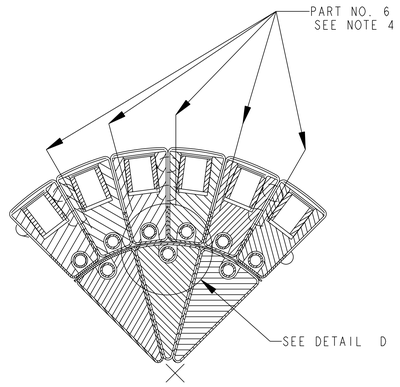

SECTION C-C
SCALE 1.000

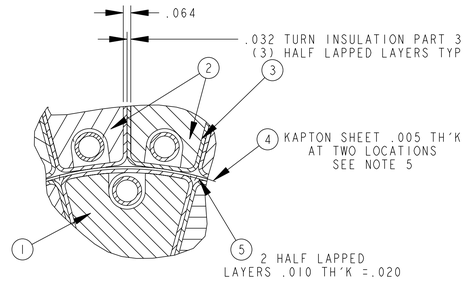

DETAIL D
SCALE 2.000

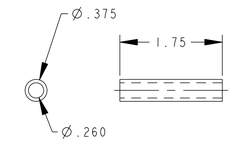

PART 7

NO. REQ'D = 9

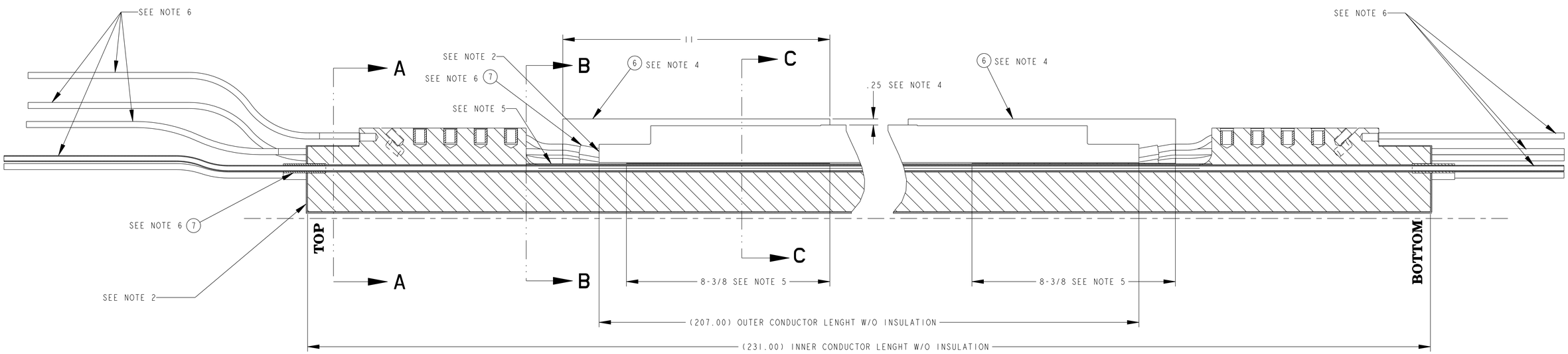

SECTION E-E

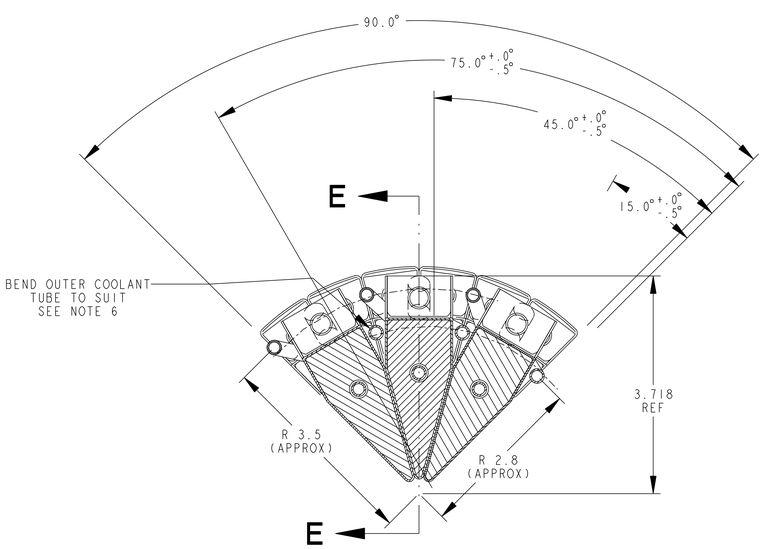

SECTION A-A
SCALE 1.000

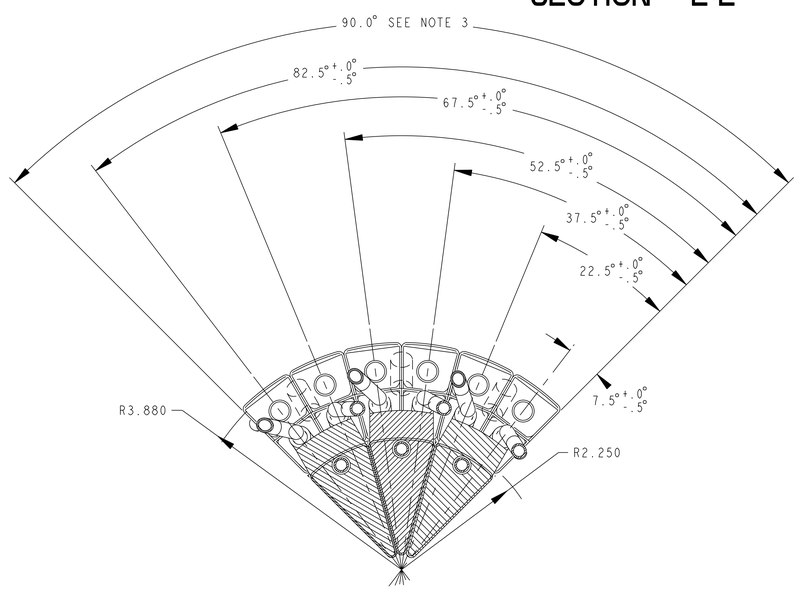

SECTION B-B
SCALE 1.000

NOTE:

1. ASSEMBLY PER NSTX-PROCEDURE NO. D-NSTX-IP-2845
2. ENSURE THAT TURN INSULATOR IS APPLIED OVER ENDS OF EACH CONDUCTOR PRIOR TO QUADRANT ASSEMBLY
3. ALIGMENT FIXTURE MUST BE UTILIZED TO MAINTAIN ANGULAR TOLERANCE BETWEEN CONDUCTORS DURING ASSEMBLY.
4. TEFLON SPACERS .010 TH'K P/N 6 TO BE INSTALLED BETWEEN OUTER CONDUCTORS IN THE AREA OF TF JOINT AS SHOWN. SPACER TO EXTEND APPROX. 1/4" BEYOND COPPER.
5. INSTALL KAPTON BARRIER P/N 4 BETWEEN INNER AND OUTER CONDUCTORS. PN 1 & 2 AT (2) LOCATIONS IN AREA OF OUTER CONDUCTOR TF JOINTS.
6. G-10 SLEEVES PART 7 TO BE INSTALLED BEFORE BENDING. COPPER TUBING TO EXTEND 12" MIN. FROM END OF TF BUNDLE. FINAL BENDING REQUIRED AT ASSEMBLY WITH HUB STRUCTURE.

03	02	01	PART NO.	DRAWING NO	NOMENCLATURE OR DESCRIPTION	MATERIAL
		9	7	THIS DWG	G-10 SLEEVE SEE DETAIL	G-10
		5	6	COMM	TEFLON SHEET .010 TH'K X 1 1/4 WD X 11" LG	TEFLON
		A/R	5	COMM	INSUL. BARRIER .010 NOM TH'K	B-STAGE CTD-112P
		A/R	4	COMM	BARRIER - .005 TH'K X 8 3/8"WD X LG TO SUIT	KATPON SHEET NON-ASHESIVE
		A/R	3	COMM	TURN INSULATION .005 NOM TH'K	B-STAGE CTD-112P
		6	2	E-DC1306	TF CORE OUTER CONDUCTOR	SEE DWG
		3	1	E-DC1305	TF CORE INNER CONDUCTOR	SEE DWG
		X	-----	THIS DWG	TF INNER CORE QUADRANT ASSEMBLY	------

ASSY QTY — PARTS LIST

NSTX-E-DC1302

COMPUTER GENERATED DRAWING
MANUAL CHANGES NOT PERMITTED

Pro E

DO NOT VERIFY INFORMATION BY SCALING DRAWING

CENTRAL FILES:
UNLESS OTHERWISE SPECIFIED
DIMENSIONS ARE IN INCHES
MACHINE SURFACES: 125
BREAK SHARP EDGES .005/.020
TOLERANCES NON-CUMULATIVE

NEXT ASSEMBLY

DECIMAL-INCH		FRACTIONS	
.X	±.100	0°-12°	±1/16
.XX	±.030	12°-72°	±1/8
.XXX	±.005	72°-120°	±1/4
ANGULAR	±0°-15'	OVER 120°	±1/2

PRINCETON PLASMA PHYSICS LABORATORY
PRINCETON UNIVERSITY
NATIONAL SPHERICAL TORUS EXPERIMENT
CONDUCTOR/INSULATION ARRANGEMENT
TF INNER CORE QUADRANT ASSEMBLY

DIV: MECH. ENG. | DATE: 7/23/03 | CADD FILE: E-DC1302 .DRW
ENG: J.CHRZANOWSKI | APPROVED J.CHRZANOWSKI
DSN: B.PAUL
CHK: M. KALISH | CHK MK | SUPV JS | EMI
E-DC1302
SHEET 1 OF 2 | REV 0

WELDING ENGINEER
APPVD: _____ DATE

NO.	REVISION	BY	CH	SUP	APPROVED	DATE

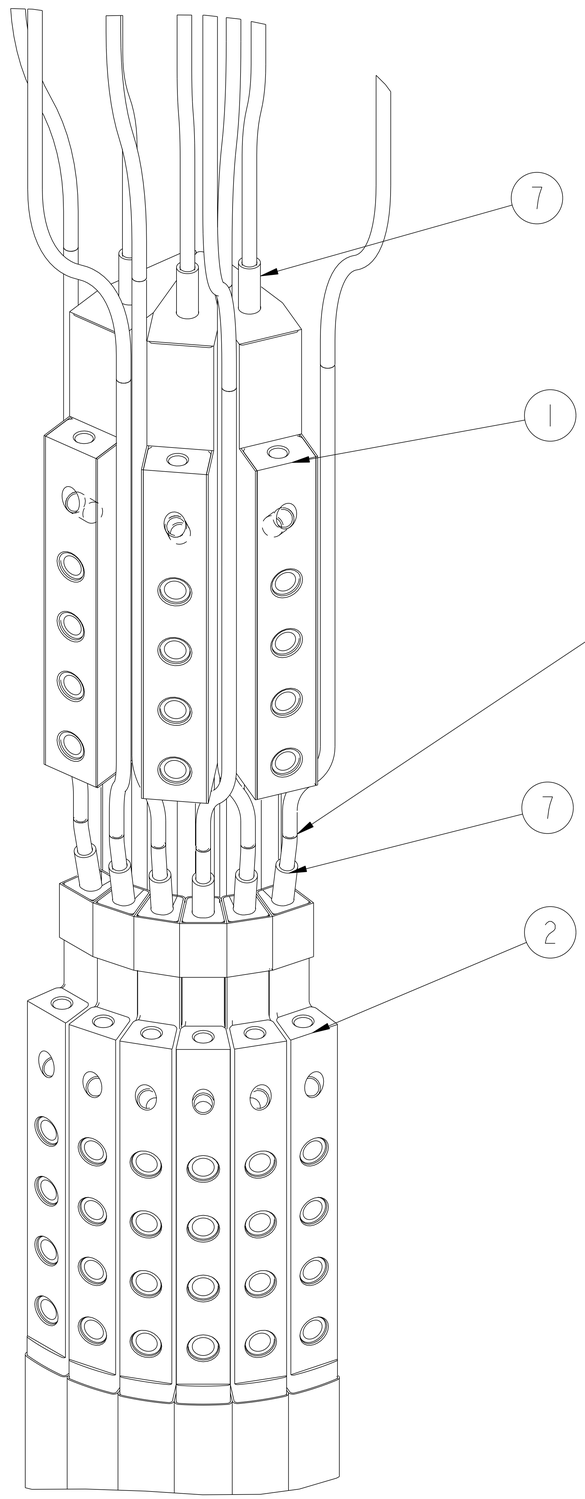

ISOMETRIC VIEW
TOP OF TF CORE

SCALE 1.000

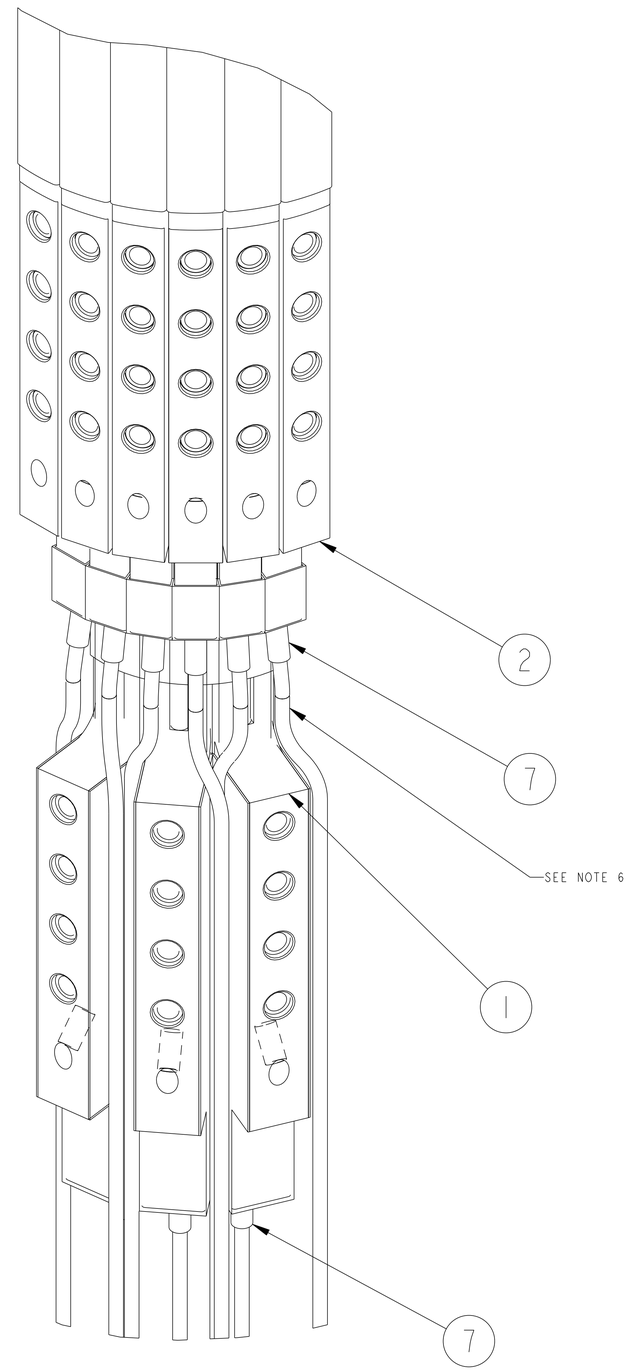

ISOMETRIC VIEW
BOTTOM OF TF CORE

SCALE 1.000

COMPUTER GENERATED DRAWING MANUAL CHANGES NOT PERMITTED	CENTRAL FILES:	PRINCETON PLASMA PHYSICS LABORATORY PRINCETON UNIVERSITY NATIONAL SPHERICAL TORUS EXPERIMENT CONDUCTOR/INSULATION ARRANGMENT TF INNER CORE QUADRANT ASSEMBLY
	UNLESS OTHERWISE SPECIFIED	
Pro E	DIMENSIONS ARE IN INCHES MACHINE SURFACES: 125	
DO NOT VERIFY INFORMATION BY SCALING DRAWING	BREAK SHARP EDGES .005/.020	
	TOLERANCES NON-CUMULATIVE	DIV: MECH. ENG. / DATE: 7/22/03 / CADD FILE: E-DC1302 .DRW
NEXT ASSEMBLY	DECIMAL-INCH: .X ±.100, .XX ±.030, .XXX ±.005, ANGULAR ±0°-15' / FRACTIONS: 0°-12° ±1/16, 12°-72° ±1/8, 72°-120° ±1/4, OVER 120° ±1/2	ENG: CHRZANOWSKI / APPROVED J.CHRZANOWSKI / E-DC1302
		DSN: B. PAUL
		CHK: M. KALISH / CHK MK / SUPV JS / EMI / SHEET 2 OF 2 / REV 0

WELDING ENGINEER
APPVD: _____ DATE

NSTX-E-DC1302