NO.	REVISION	BY	CH	SUP	APPROVED	DATE
1	REVISED PER ECN NO. 4785	BP	MK	JS	J.CHRZANOWSKI	7/23/03

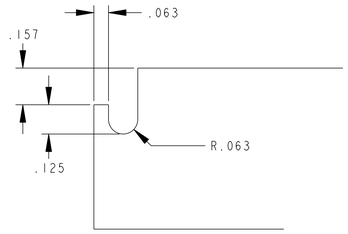

DETAIL B
SCALE 4.000

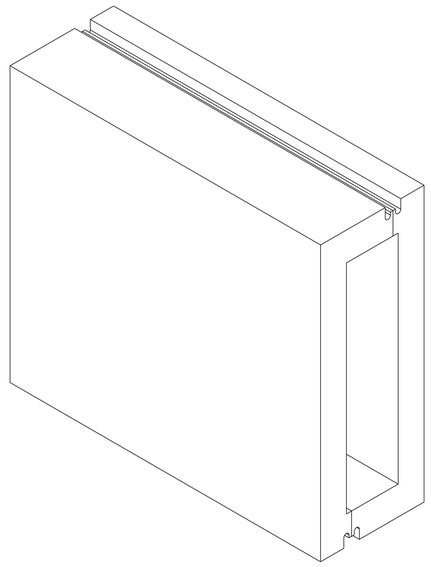

INNER FLAG BOX WELDMENT PRIOR TO MACH. ISOMETRIC

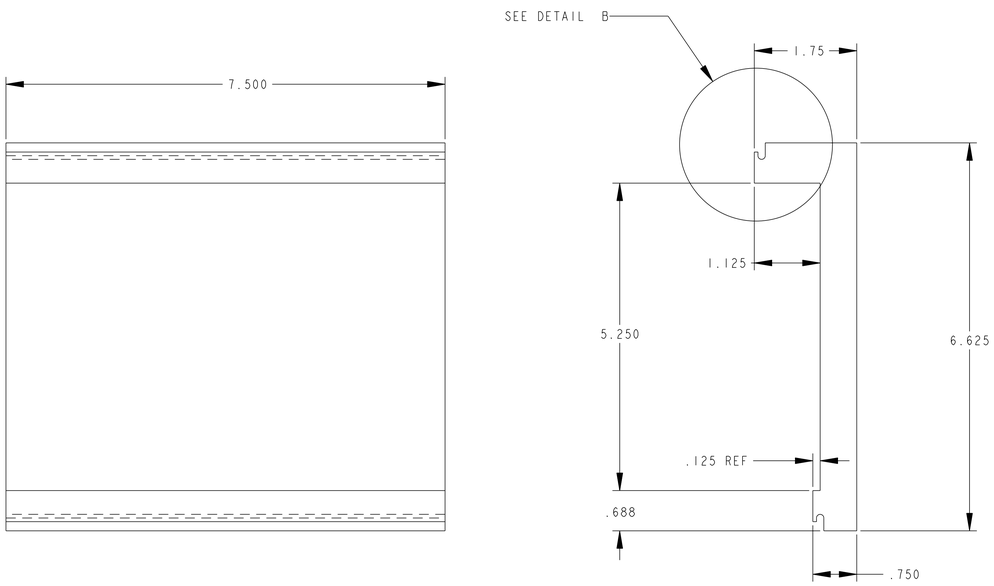

FLAG BOX SIDE 1
NO. REQ'D : 48

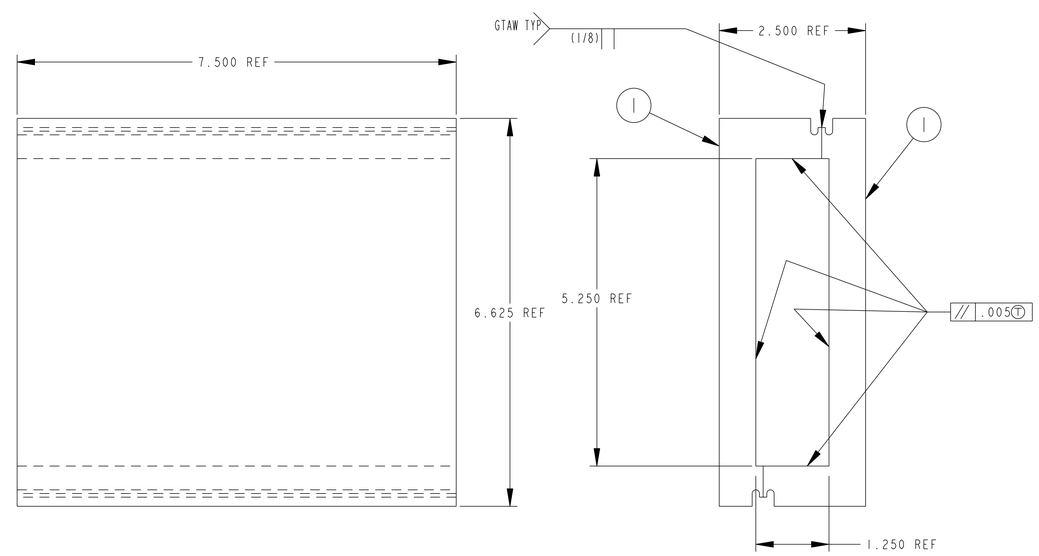

INNER FLAG BOX WELDMENT
NO. REQ'D : 24

NOTES:

1. WELDING SHALL BE PERFORMED IN ACCORDANCE WITH THE REQUIREMENTS OF ASME B31.3 AND PPPL PROCEDURE NO. EM-002. VISUAL WELD INSPECTION SHALL BE PERFORMED IN ACCORDANCE WITH THE ACCEPTANCE CRITERIA OF ASME B31.3 CATEGORY D.
2. REFERECE PERMEABILITY USING SEVERN GUAGE:

   BASE MATERIAL 1.05 Mu

   FABRICATED PART 1.05 Mu

   WELD 1.2 Mu
3. USE GUAGE BLOCKS FOR ALIGNMENT OF WELDMENT.

03	02	01	PART NO.	DRAWING NO	NOMENCLATURE OR DESCRIPTION	MATERIAL
		2	1	THIS DWG	FLAG BOX SIDES SEE DETAIL	304SS
		--	----	THIS DWG	INNER FLAG BOX WELDMENT/FINAL MACHINING	----

ASSY QTY — PARTS LIST

COMPUTER GENERATED DRAWING MANUAL CHANGES NOT PERMITTED

Pro E

DO NOT VERIFY INFORMATION BY SCALING DRAWING

CENTRAL FILES:

UNLESS OTHERWISE SPECIFIED

DIMENSIONS ARE IN INCHES
MACHINE SURFACES 125

BREAK SHARP EDGES .005/.020

TOLERANCES NON-CUMULATIVE

NEXT ASSEMBLY

DECIMAL-INCH		FRACTIONS	
.X	±.100	0°-12°	±1/16
.XX	±.030	12°-72°	±1/8
.XXX	±.005	72°-120°	±1/4
ANGULAR	±0°-15'	OVER 120°	±1/2

PRINCETON PLASMA PHYSICS LABORATORY
PRINCETON UNIVERSITY
NATIONAL SPHERICAL TORUS EXPERIMENT
TF CORE
INNER FLAG BOX WELDMENT
AND FINAL MACHINING

DIV: MECH. ENG. | DATE: 6/25/03 | CADD FILE: E-DC1304 .DRW

ENG: J.CHRZANOWSKI | APPROVED J.CHRZANOWSKI

DSN: B.PAUL

CHK: M. KALISH | CHK MK | SUPV JS

E-DC1304

SHEET 1 OF 2 | REV 1

WELDING ENGINEER
APPVD. R.PARSELLS DATE 6/26/03

NSTX-E-DC1304

EM1

NO.	REVISION	BY	CH	SUP	APPROVED	DATE
1	REVISED PER ECN NO. 4785	BP	MK	JS	J.CHRZANOWSKI	7/23/03

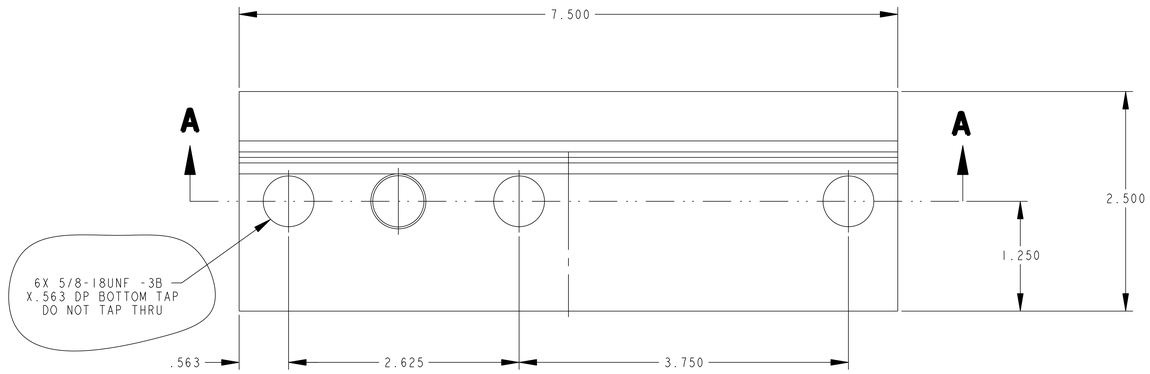

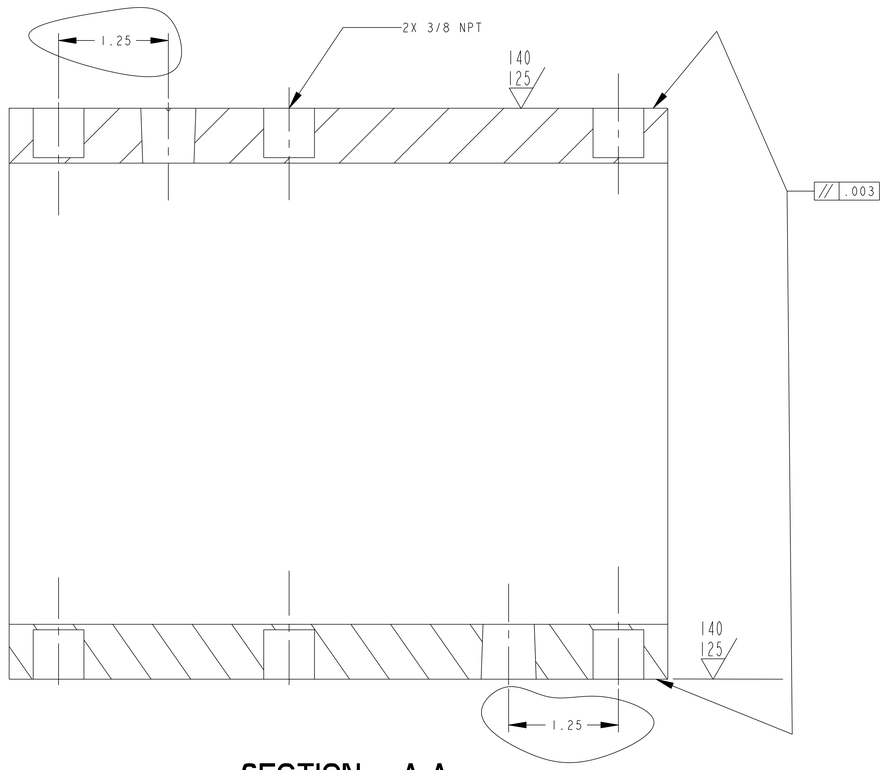

SECTION A-A

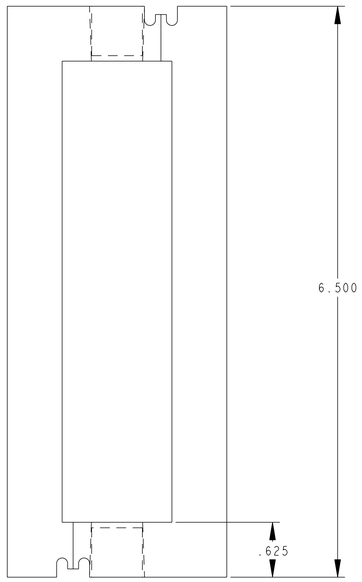

INNER FLAG BOX
FINAL MACHINING

NO REQ'D : 24
SCALE 1.5

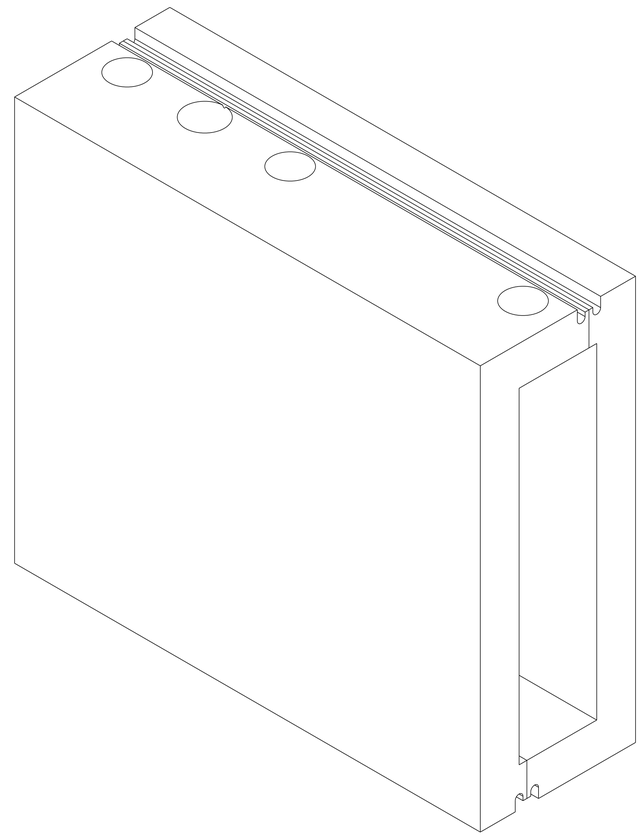

INNER FLAG BOX
ISOMETRIC

WELDING ENGINEER
APPVD: _____ DATE

COMPUTER GENERATED DRAWING MANUAL CHANGES NOT PERMITTED	CENTRAL FILES: UNLESS OTHERWISE SPECIFIED	PRINCETON PLASMA PHYSICS LABORATORY PRINCETON UNIVERSITY NATIONAL SPHERICAL TORUS EXPERIMENT TF CORE INNER FLAG BOX WELDMENT AND FINAL MACHINING	
Pro E	DIMENSIONS ARE IN INCHES MACHINE SURFACES 125		
DO NOT VERIFY INFORMATION BY SCALING DRAWING	BREAK SHARP EDGES .005/.020		
	TOLERANCES NON-CUMULATIVE	DIV: MECH. ENG. / DATE: 6/25/03	CADD FILE: E-DC1304 .DRW
NEXT ASSEMBLY	DECIMAL-INCH: .X ±.100; .XX ±.030; .XXX ±.005; ANGULAR 10°-15' FRACTIONS: 0°-12° ±1/16; 12°-72° ±1/8; 72°-120° ±1/4; OVER 120° ±1/2	ENG: J.CHRZANOWSKI / DSN: B.PAUL / CHK: M. KALISH	APPROVED: J.CHRZANOWSKI; CHK MK; SUPV JS
			E-DC1304
			SHEET 2 OF 2 / REV 1

EMI

NSTX-E-DC1304