NO.	REVISION	BY	CH	SUP	APPROVED	DATE

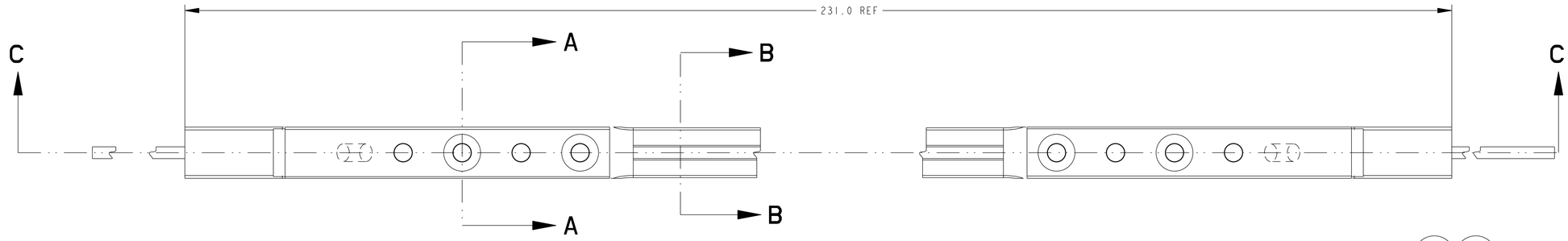

INNER CONDUCTOR

NO. REQ'D : 12

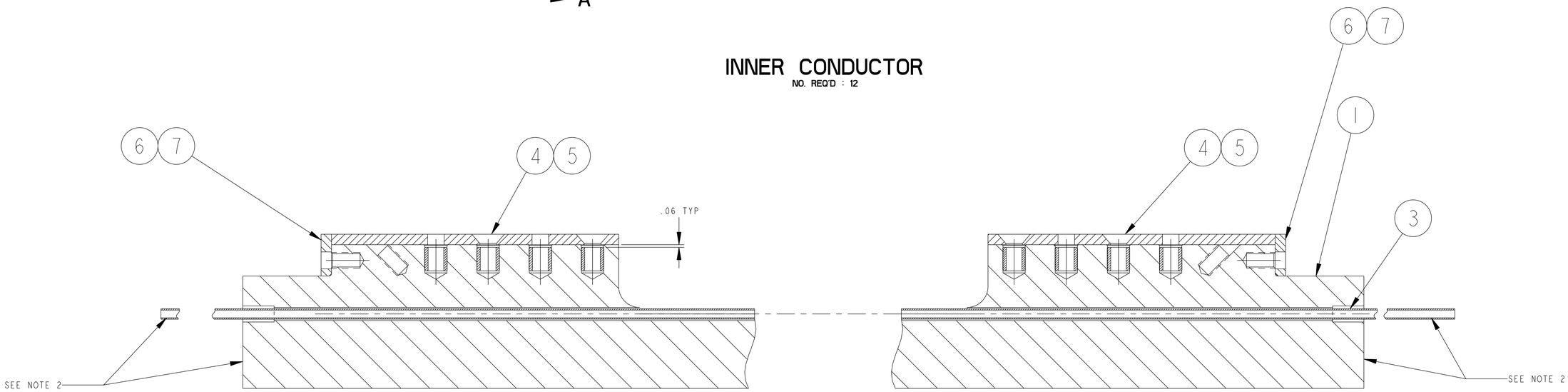

SECTION C-C

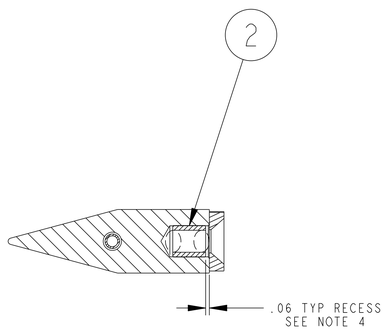

SECTION A-A

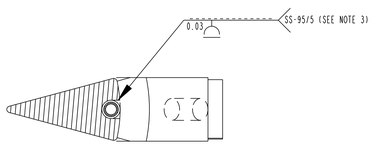

SECTION B-B

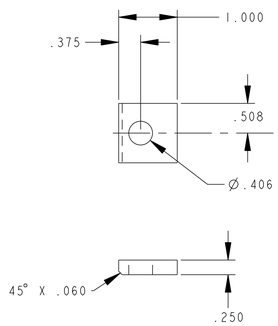

PART 6

NO. REQ'D = 24

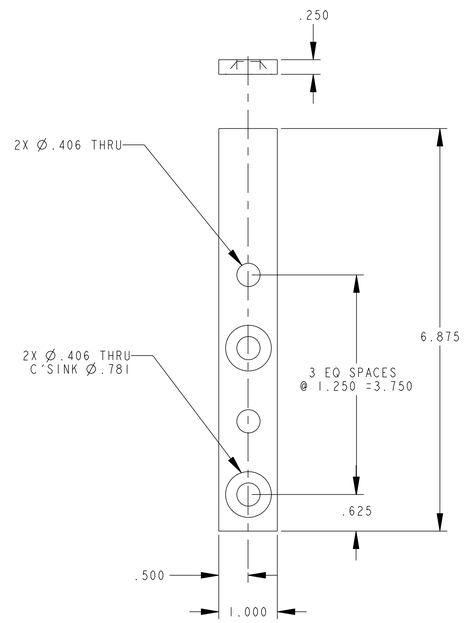

PART 4

NO. REQ'D = 24

NOTE

1. ASSEMBLE PER PROCEDURE NO. D-NSTX-IP-2845
2. EXTEND COPPER TUBING 14" MINIMUM FROM COPPER FACE.
3. COOLANT TUBE TO BE SOLDERED USING 95/5 TIN/ANTIMONY SOFT-SOLDER.
4. INSERTS PART NO. 2 TO BE RECESS .06 BELOW COPPER FACE
5. INSTALL ELECTRICAL FACE SHIELDS PRIOR TO SAND-BLASTING
6. SAND-BLAST CONDUCTOR SURFACE PER PROCEDURE NO. D-NSTX-IP-2845

03	02	01	PART NO.	DRAWING NO	NOMENCLATURE OR DESCRIPTION	MATERIAL
		2	7	COMM	3/8-16UNC X .5LG HEX HD CAP SCREW	SS
		2	6	THIS DWG	ELECTRICAL FACE SHIELD SEE DETAIL	G-10
		4	5	COMM	3/8-16UNC X .5LG FLAT HD CAP SCREW	SS
		2	4	THIS DWG	ELECTRICAL FACE SHIELD SEE DETAIL	G-10
		1	3	COMM	1/4" O.D. TUBING .032 WALL LENGTH TO SUIT	COPPER
		8	2	COMM	TAP LOCK INSERT NO. HM37516-50 (3/8-16UNC)X.562 LG	SS
		1	1	E-DC1289	TF CORE INNER CONDUCTOR	SEE DWG
		--	----	THIS DWG	TF CORE INNER CONDUCTOR ASSEMBLY	SEE DWG

ASSY QTY — PARTS LIST

COMPUTER GENERATED DRAWING MANUAL CHANGES NOT PERMITTED

Pro E

DO NOT VERIFY INFORMATION BY SCALING DRAWING

CENTRAL FILES:

UNLESS OTHERWISE SPECIFIED

DIMENSIONS ARE IN INCHES
MACHINE SURFACES 125

BREAK SHARP EDGES .005/.020

TOLERANCES NON-CUMULATIVE

DECIMAL-INCH		FRACTIONS	
.X	±.100	0°-12°	±1/16
.XX	±.030	12°-72°	±1/8
.XXX	±.005	72°-120°	±1/4
ANGULAR	10'-15'	OVER 120°	±1/2

NEXT ASSEMBLY

WELDING ENGINEER
APPVD: R.PARSELLS DATE 7/23/03

PRINCETON PLASMA PHYSICS LABORATORY
PRINCETON UNIVERSITY
NATIONAL SPHERICAL TORUS EXPERIMENT

TF CORE
INNER CONDUCTOR ASSEMBLY

DIV: MECH. ENG.
ENG: CHRZANOWSKI
DSN: B. PAUL
CHK: M. KALISH

DATE: 7/23/03
APPROVED
J.CHRZANOWSKI
CHK MK SUPV JS

CADD FILE: E-DC1305 .DRW

E-DC1305

SHEET 1 OF 1 REV 0

NSTX-E-DC1305

EMI