NO.	REVISION	BY	CH	SUP	APPROVED	DATE

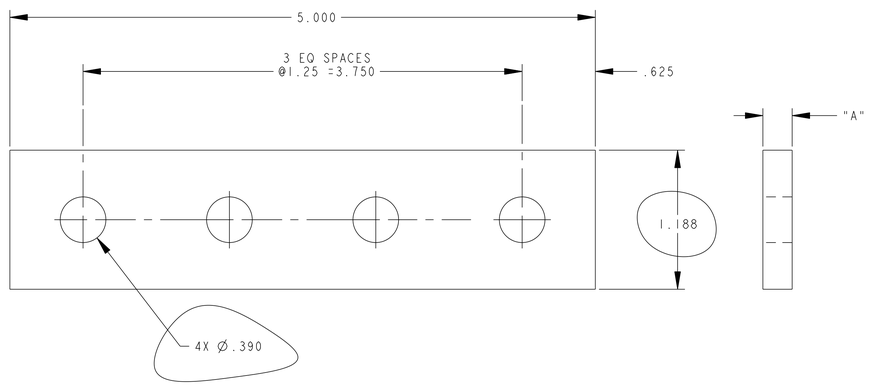

PART NO.	DIM"A"	NO.REQ'D
E-DC1308-1	1/4"	72
E-DC1308-2	1/16"	72

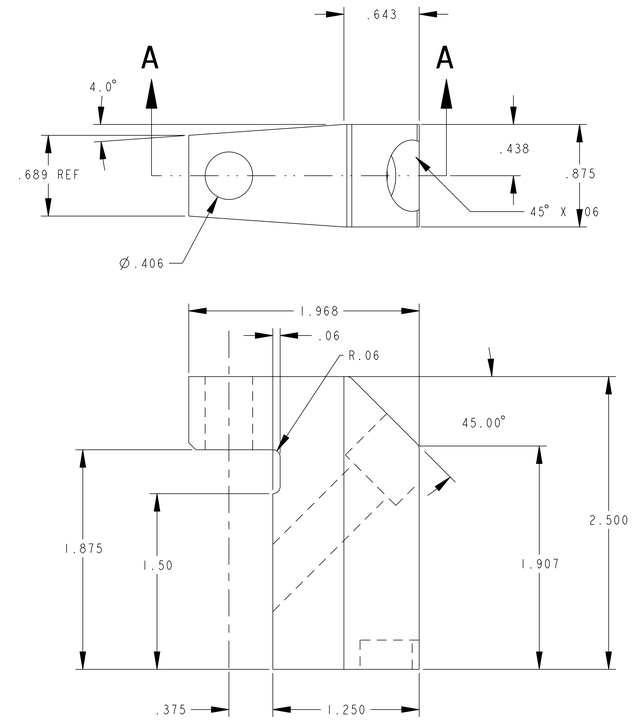

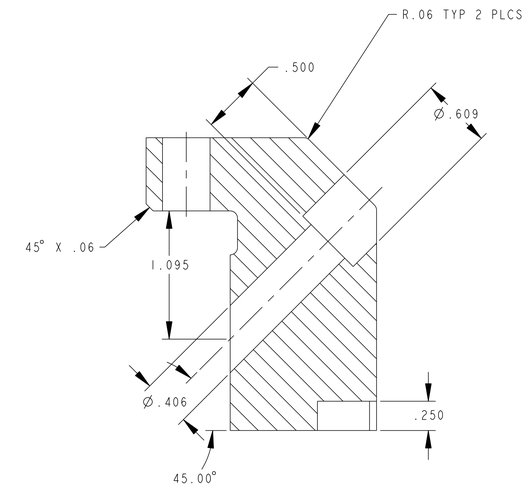

SECTION A-A

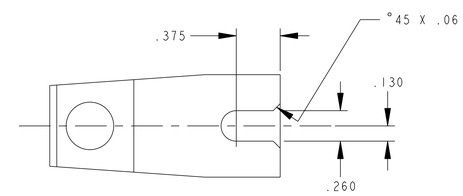

PART 3

NO. REQ'D = 48

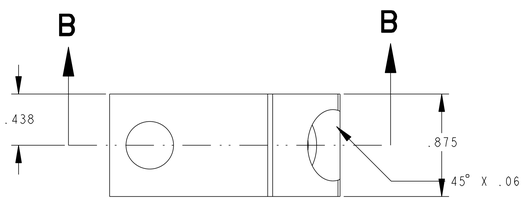

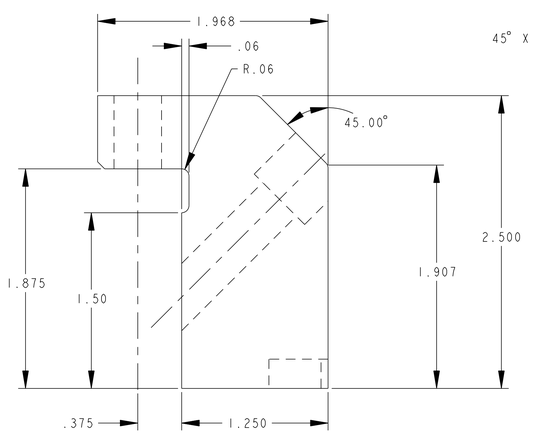

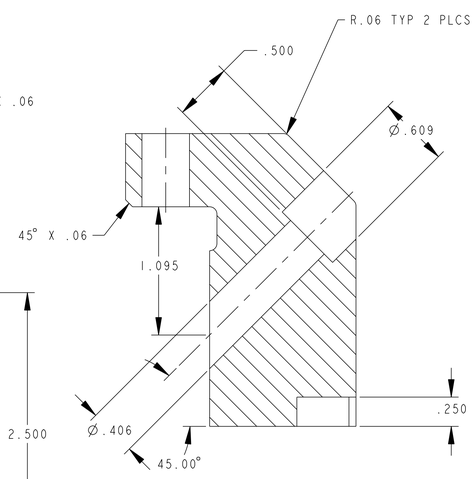

SECTION B-B

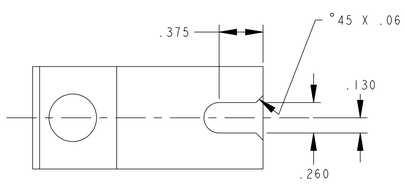

PART 4

NO. REQ'D = 24

NOTES:

1. REFERECE PERMEABILITY USING SEVERN GUAGE:

BASE MATERIAL	1.05 Mu
FABRICATED PART	1.05 Mu
WELD	1.2 Mu

PART NO,	DRAWING NO.	NOMENCLATURE OR DESCRIPTION	MATERIAL	QTY REQ'D
4	THIS DWG	INNER SHEAR KEY SEE DETAIL	304SS	24
3	THIS DWG	OUTER SHEAR KEY SEE DETAIL	304SS	48
2	THIS DWG	WASHER PLAT 1/16" TH'K SEE DETAIL	304SS	72
1	THIS DWG	WASHER PLATE 1/4" TH'K SEE DETAIL	304SS	72

PARTS LIST

COMPUTER GENERATED DRAWING MANUAL CHANGES NOT PERMITTED

Pro E

DO NOT VERIFY INFORMATION BY SCALING DRAWING

CENTRAL FILES:

UNLESS OTHERWISE SPECIFIED

DIMENSIONS ARE IN INCHES
MACHINE SURFACES 125

BREAK SHARP EDGES .005/.020

TOLERANCES NON-CUMULATIVE

NEXT ASSEMBLY

DECIMAL-INCH		FRACTIONS	
.X	±.100	0°-12°	±1/16
.XX	±.030	12°-72°	±1/8
.XXX	±.005	72°-120°	±1/4
ANGULAR	±0°-15'	OVER 120°	±1/2

PRINCETON PLASMA PHYSICS LABORATORY
PRINCETON UNIVERSITY
NATIONAL SPHERICAL TORUS EXPERIMENT
TF INNER CORE
MISCELLANEOUS DETAILS

DIV: MECH. ENG.
ENG: J.CHRZANOWSKI
DSN: B. PAUL
CHK: M. KALISH

DATE: 7/10/03
APPROVED
J.CHRZANOWSKI
CHK MK
SUPV JS

CADD FILE: E-DC1308 .DRW

E-DC1308

SHEET 1 OF 2 REV 0

WELDING ENGINEER
APPVD: _____ DATE

NSTX-E-DC1308

EMI