NO.	REVISION	BY	CH	SUP	APPROVED	DATE

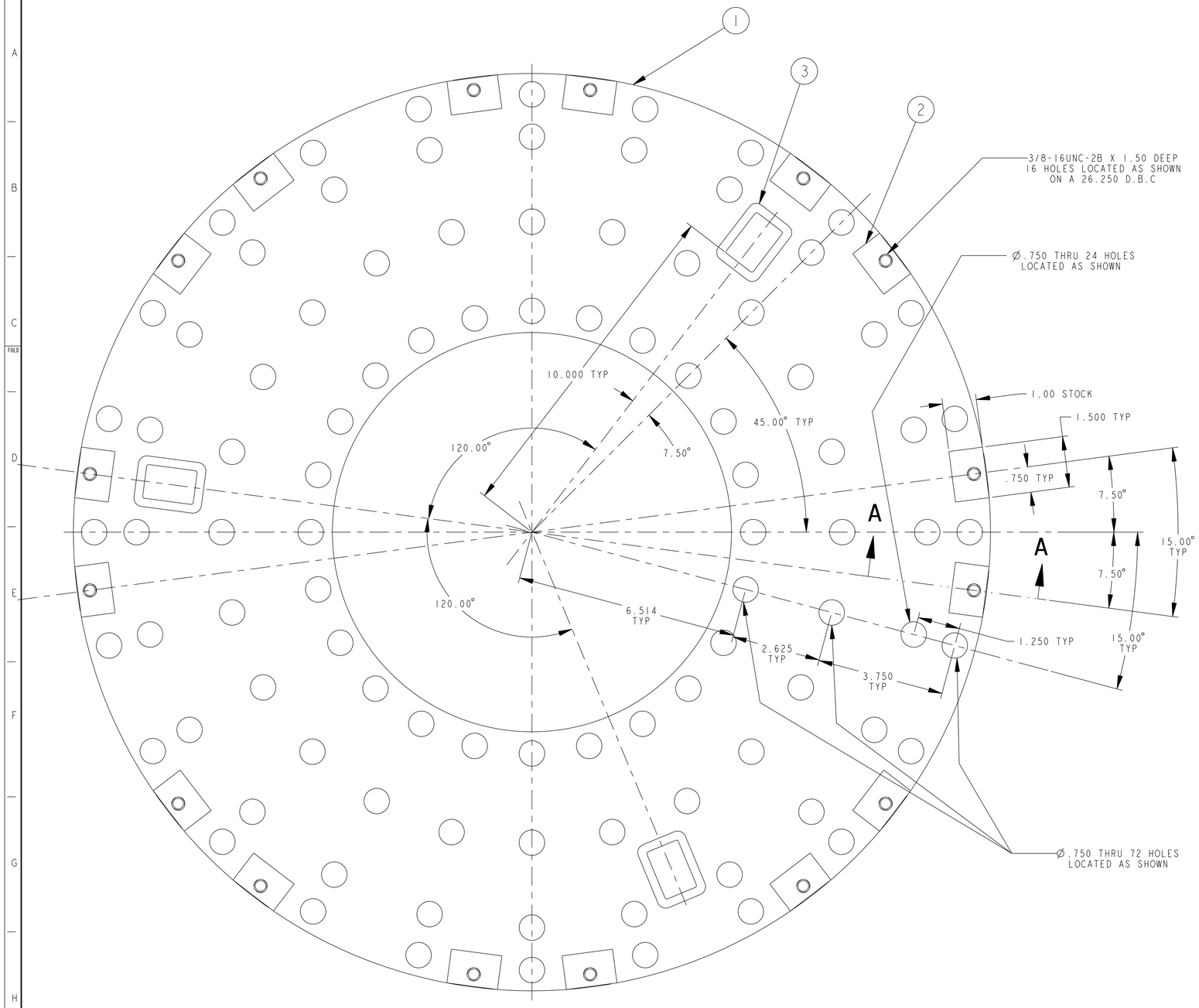

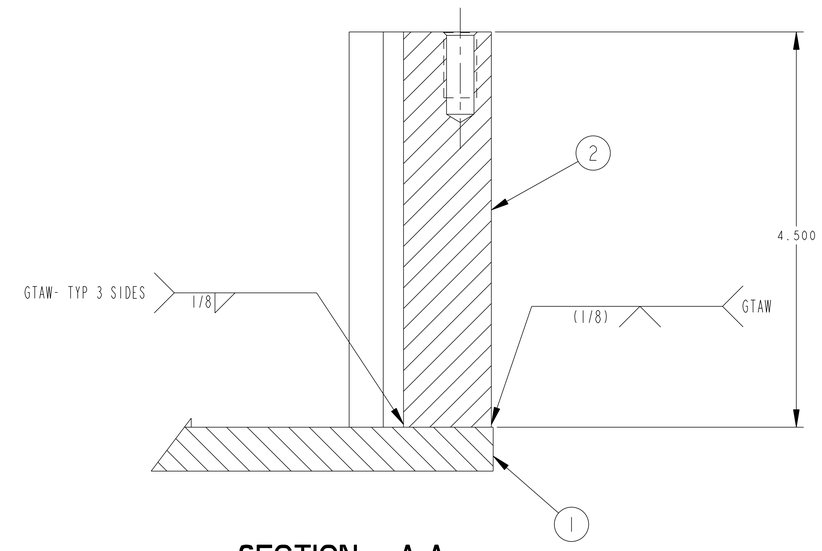

SECTION A-A

SCALE 1.500

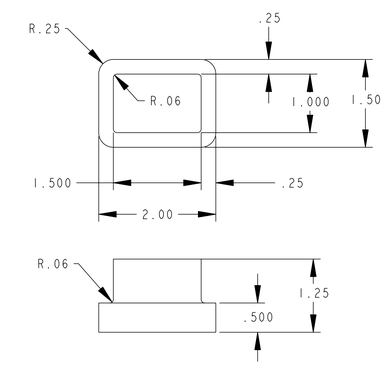

PART 3

NO. REQ'D : 3

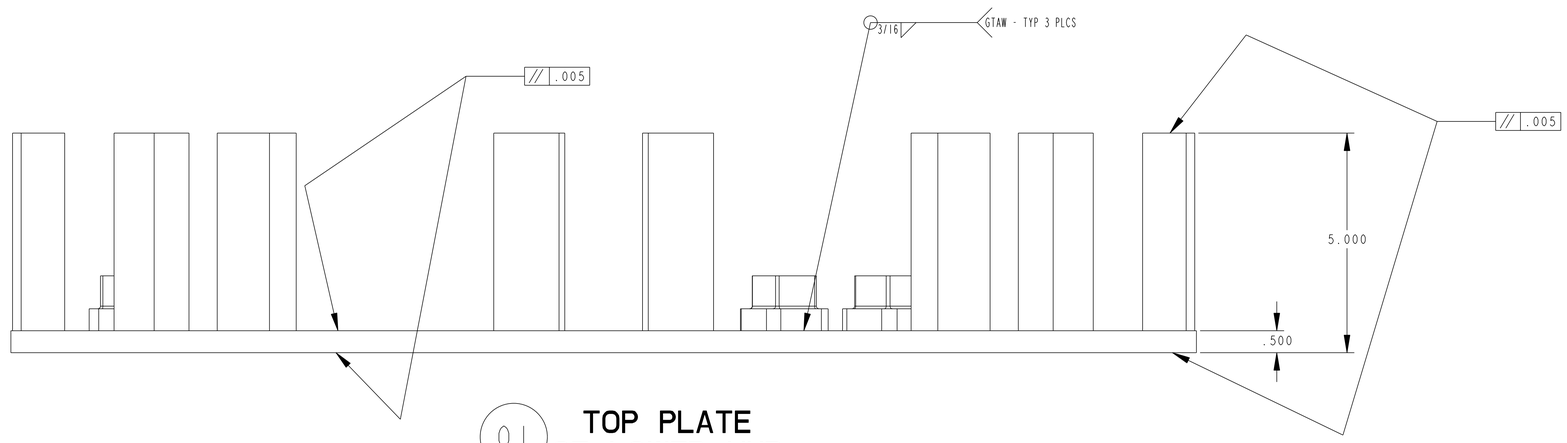

01 TOP PLATE OF LOWER HUB

NO. REQ'D : 1

NOTES:

1. WELDING SHALL BE PERFORMED IN ACCORDANCE WITH THE REQUIREMENTS OF ASME B31.3 AND PPPL PROCEDURE NO. EM-002. VISUAL WELD INSPECTION SHALL BE PERFORMED IN ACCORDANCE WITH THE ACCEPTANCE CRITERIA OF ASME B31.3 CATEGORY D.
2. REFERECE PERMEABILITY USING SEVERN GUAGE:

BASE MATERIAL	1.05 Mu
FABRICATED PART	1.05 Mu
WELD	1.2 Mu

03	02	01	PART NO.	DRAWING NO	NOMENCLATURE OR DESCRIPTION	MATERIAL
		3	3	THIS DWG	SHEAR LUG 2 X 1.5 X 1.5 SEE DETAIL	304SS
		16	2	THIS DWG	SUPPORT POST 1 X 1.50 X AS SHOWN	304SS
		1	1	THIS DWG	TOP PLATE 5/8" TH'K SEE DETAIL	304SS
		X	-----	THIS DWG	TF HUB STRUCTURE LOWER TOP PLATE	-----

ASSY QTY — PARTS LIST

COMPUTER GENERATED DRAWING MANUAL CHANGES NOT PERMITTED

Pro E

DO NOT VERIFY INFORMATION BY SCALING DRAWING

NEXT ASSEMBLY

CENTRAL FILES:

UNLESS OTHERWISE SPECIFIED

DIMENSIONS ARE IN INCHES
MACHINE SURFACES: 125

BREAK SHARP EDGES .005/.020

TOLERANCES NON-CUMULATIVE

DECIMAL-INCH		FRACTIONS	
.X	±.100	0°-12°	±1/16
.XX	±.030	12°-72°	±1/8
.XXX	±.005	72°-120°	±1/4
ANGULAR	±0°-15'	OVER 120°	±1/2

PRINCETON PLASMA PHYSICS LABORATORY
PRINCETON UNIVERSITY
NATIONAL SPHERICAL TORUS EXPERIMENT

TF CORE
TF HUB STRUCTURE - LOWER
TOP PLATE WELDMENT AND MACHINING

DIV: MECH. ENG. | DATE: | CADD FILE: E-DC1309 .DRW

ENG: J.CHRZANOWSKI | APPROVED

DSN: B.PAUL

CHK: | CHK | SUPV

E-DC1309

SHEET 1 OF 1 | REV 0

WELDING ENGINEER
APPVD:_____ DATE

NSTX-E-DC1309