NO.	REVISION	BY	CH	SUP	APPROVED	DATE

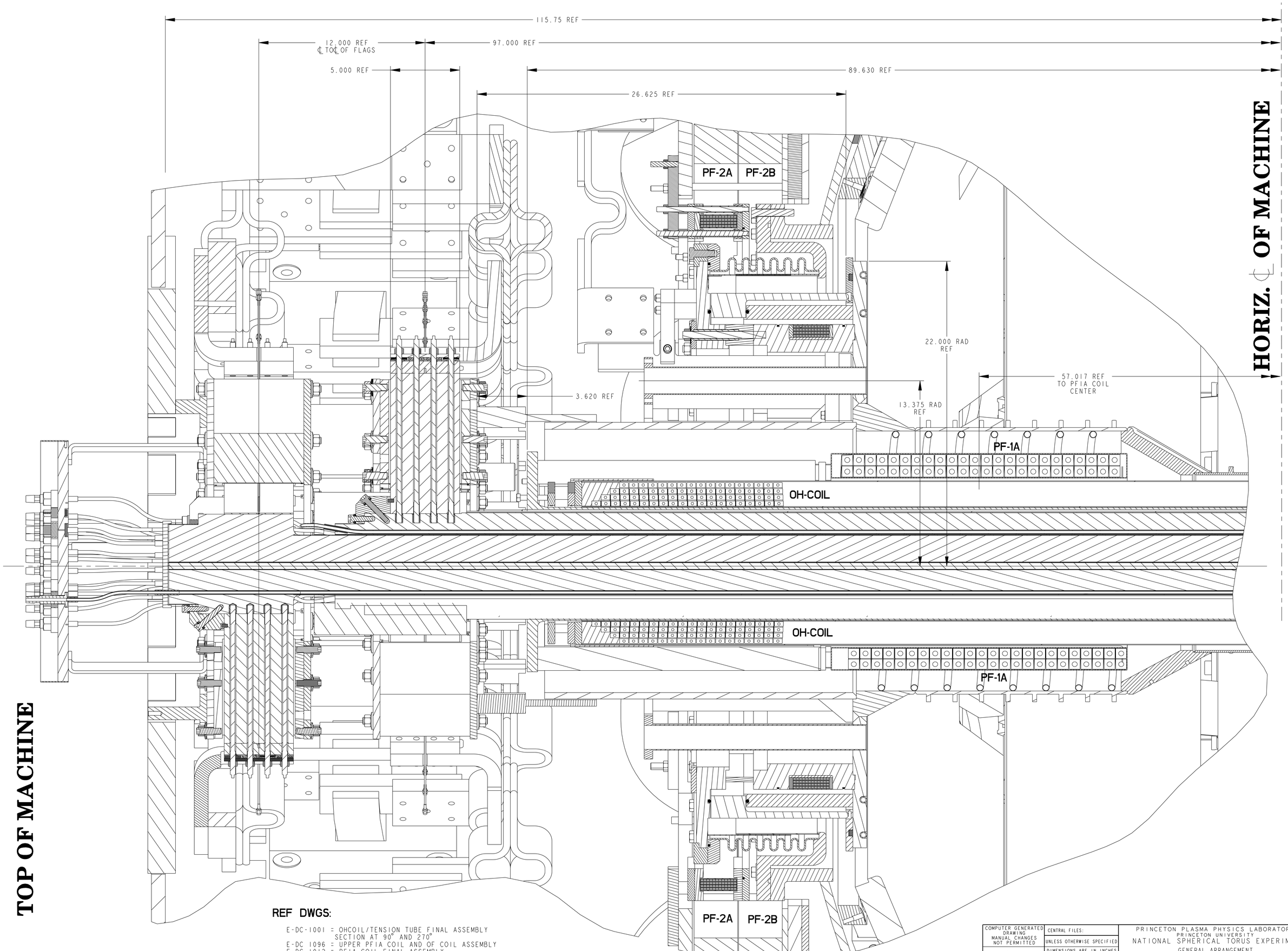

REF DWGS:

E-DC-1001 = OHCOIL/TENSION TUBE FINAL ASSEMBLY SECTION AT 90° AND 270°
E-DC 1096 = UPPER PF1A COIL AND OF COIL ASSEMBLY
E-DC 1012 = PF1A COIL FINAL ASSEMBLY
E-DC 1099 = UPPER PF/OH LEAD ORIENTATIN PLAN VIEW
E-DC 1102 = CENTERSTACK CASING FINAL ASSEMBLY
E-DC 1277 = NEW UPPER CERAMIC INSULATION ASSEMBLY

WELDING ENGINEER
APPVD: _____ DATE

COMPUTER GENERATED DRAWING MANUAL CHANGES NOT PERMITTED	CENTRAL FILES: UNLESS OTHERWISE SPECIFIED	PRINCETON PLASMA PHYSICS LABORATORY PRINCETON UNIVERSITY NATIONAL SPHERICAL TORUS EXPERIMENT GENERAL ARRANGEMENT MACHINE ASSEMBLY TOP ELEVATION SECTION	
Pro E	DIMENSIONS ARE IN INCHES MACHINE SURFACES: 125		
DO NOT VERIFY INFORMATION BY SCALING DRAWING	BREAK SHARP EDGES .005/.020		
	TOLERANCES NON-CUMULATIVE	DIV: MECH. ENG.	DATE: 12-13-03 / CADD FILE: E-DC1322 .DRW
NEXT ASSEMBLY	DECIMAL-INCH: .X ±.100; .XX ±.030; .XXX ±.005; ANGULAR ±0°-15' / FRACTIONS: 0°-12° ±1/16; 12°-72° ±1/8; 72°-120° ±1/4; OVER 120° ±1/2	ENG: J. CHRZANOWSKI DSN: B. PAUL CHK: M. KALISH	APPROVED: J. CHRZANOWSKI CHK MK / SUPV JS E-DC1322 SHEET 1 OF 4 / REV 0

NSTX-E-DC1322

NO.	REVISION	BY	CH	SUP	APPROVED	DATE

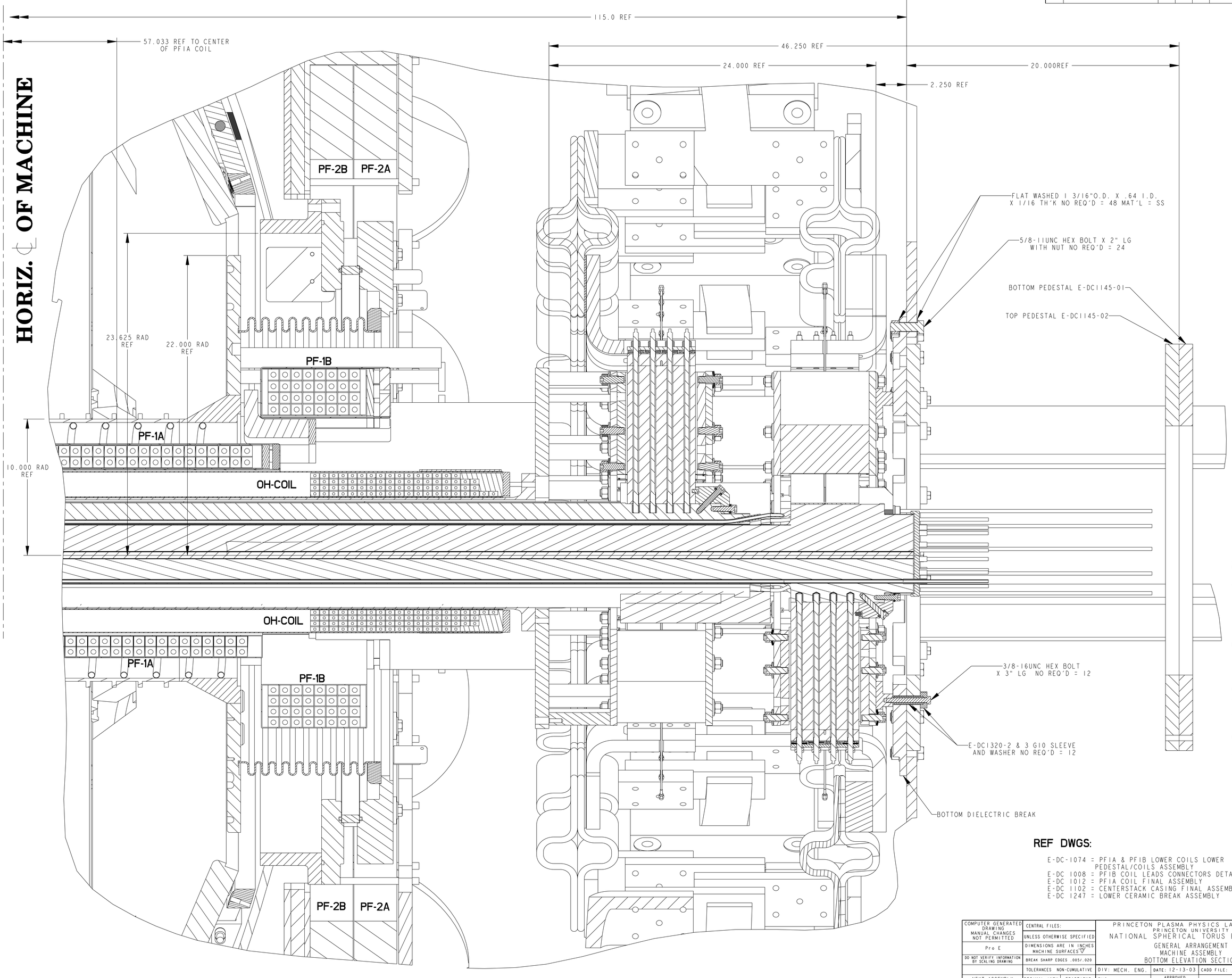

REF DWGS:

E-DC-1074 = PF1A & PF1B LOWER COILS LOWER PEDESTAL/COILS ASSEMBLY
E-DC 1008 = PF1B COIL LEADS CONNECTORS DETAILS & ASSY
E-DC 1012 = PF1A COIL FINAL ASSEMBLY
E-DC 1102 = CENTERSTACK CASING FINAL ASSEMBLY
E-DC 1247 = LOWER CERAMIC BREAK ASSEMBLY

WELDING ENGINEER
APPVD: _____ DATE

COMPUTER GENERATED DRAWING MANUAL CHANGES NOT PERMITTED	CENTRAL FILES: UNLESS OTHERWISE SPECIFIED	PRINCETON PLASMA PHYSICS LABORATORY PRINCETON UNIVERSITY NATIONAL SPHERICAL TORUS EXPERIMENT
Pro E	DIMENSIONS ARE IN INCHES MACHINE SURFACES 125	GENERAL ARRANGEMENT MACHINE ASSEMBLY BOTTOM ELEVATION SECTION
DO NOT VERIFY INFORMATION BY SCALING DRAWING	BREAK SHARP EDGES .005/.020	
	TOLERANCES NON-CUMULATIVE	DIV: MECH. ENG. / DATE: 12-13-03 / CADD FILE: E-DC1322 .DRW
NEXT ASSEMBLY	DECIMAL-INCH: .X ±.100, .XX ±.030, .XXX ±.005, ANGULAR ±0°-15' FRACTIONS: 0"-12" ±1/16, 12"-72" ±1/8, 72"-120" ±1/4, OVER 120" ±1/2	ENG: J.CHRZANOWSKI / APPROVED J.CHRZANOWSKI / E-DC1322
		DSN: B.PAUL / CHK: M.KALISH / CHK MK / SUPV JS / SHEET 2 OF 4 / REV 0

NSTX-E-DC1322

NO.	REVISION	BY	CH	SUP	APPROVED	DATE

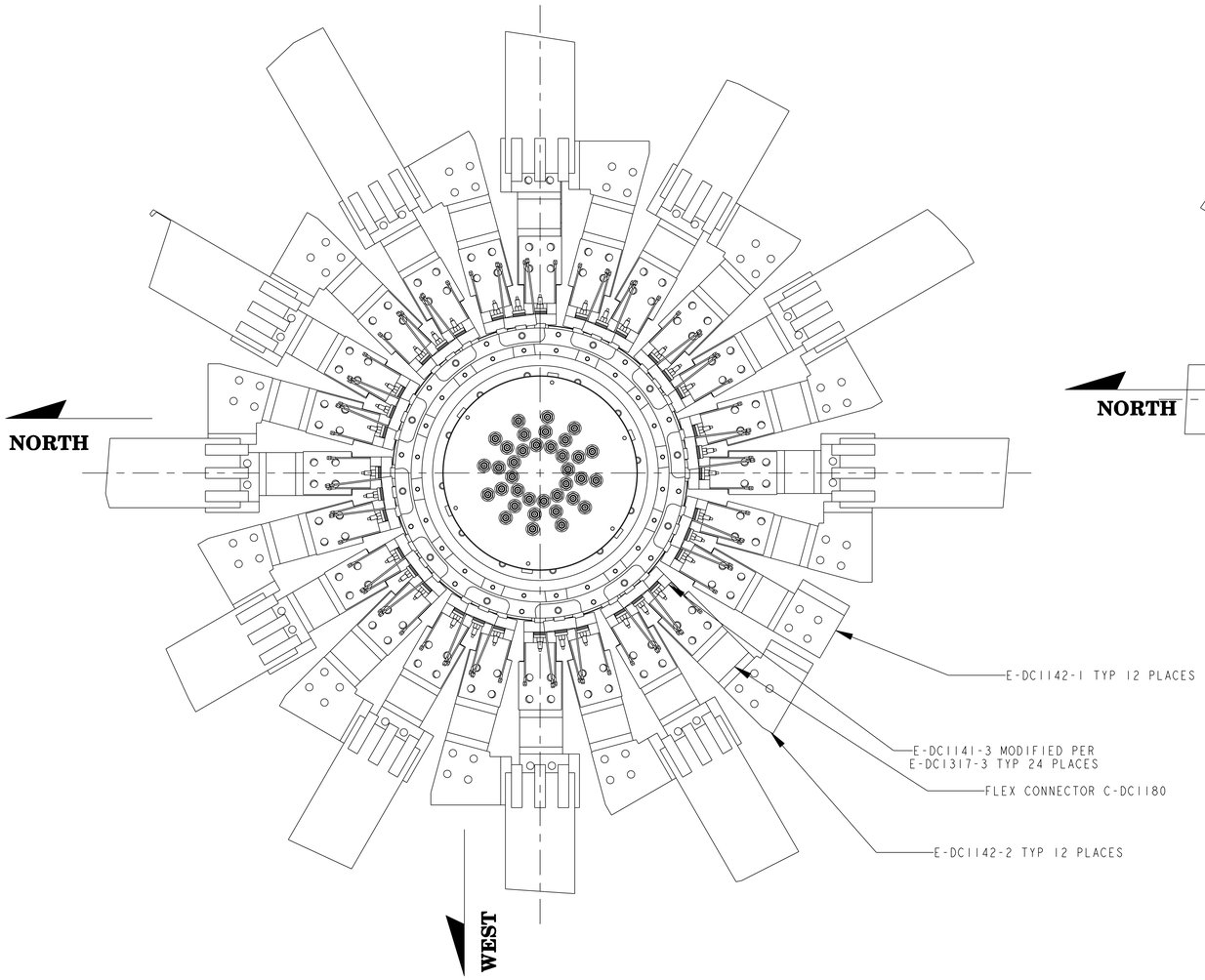

PLAN VIEW
TOP OUTER FLAG CONNECTORS

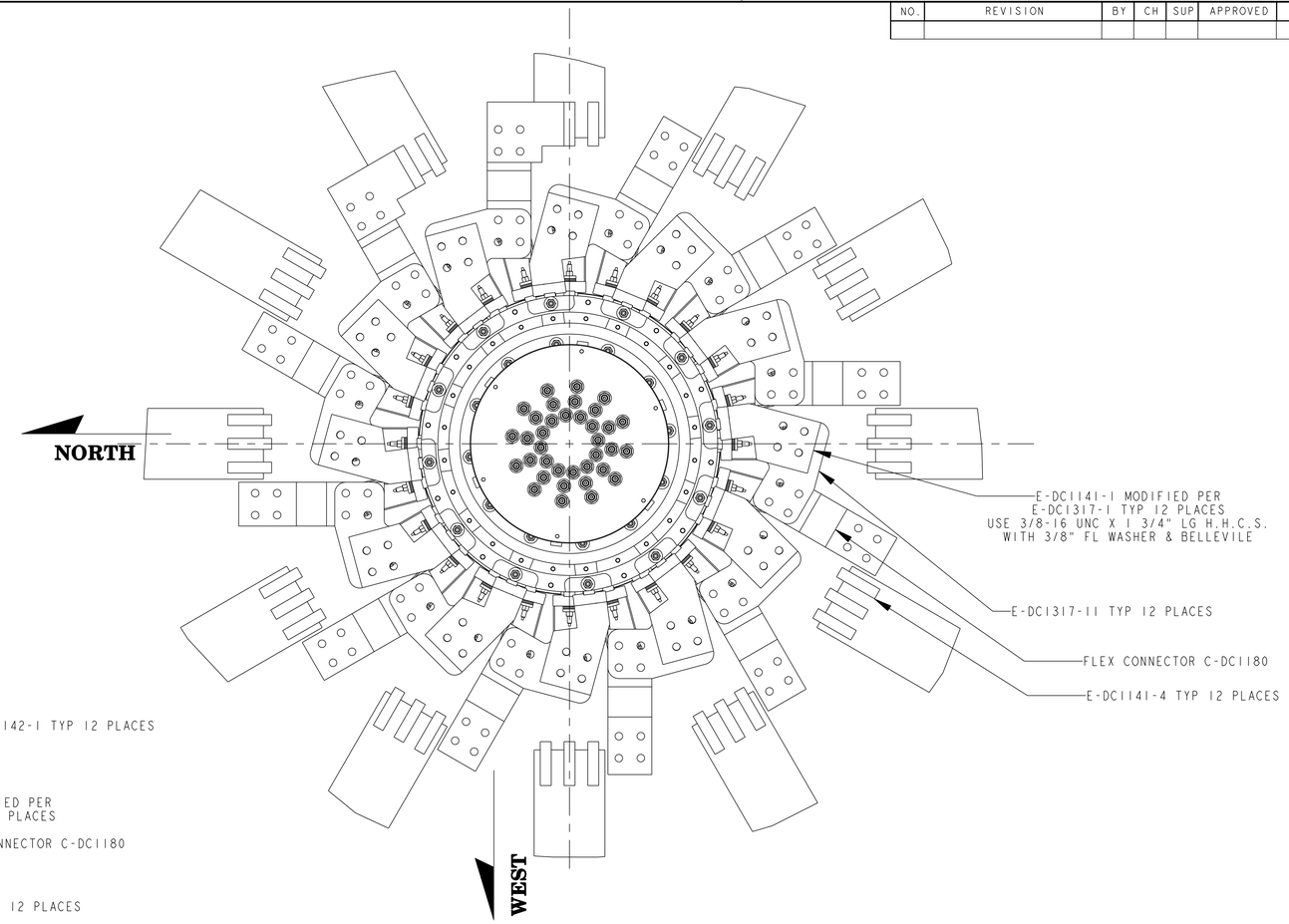

PLAN VIEW
TOP INNER FLAG CONNECTORS

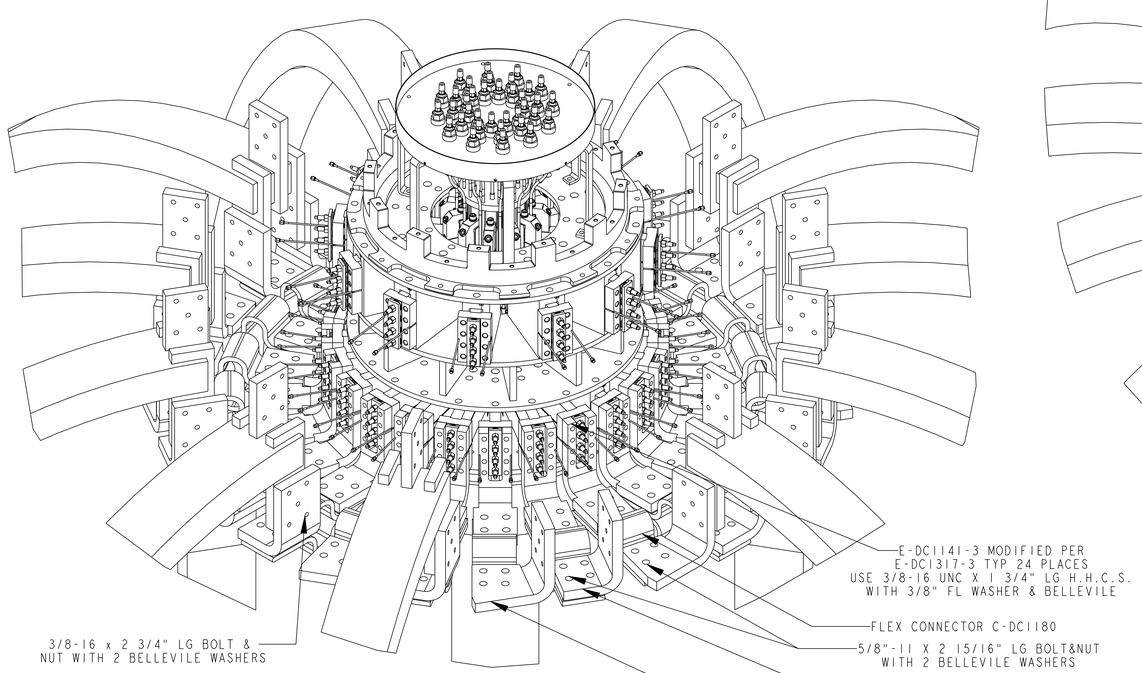

ISOMETRIC VIEW
TOP OUTER FLAG CONNECTORS

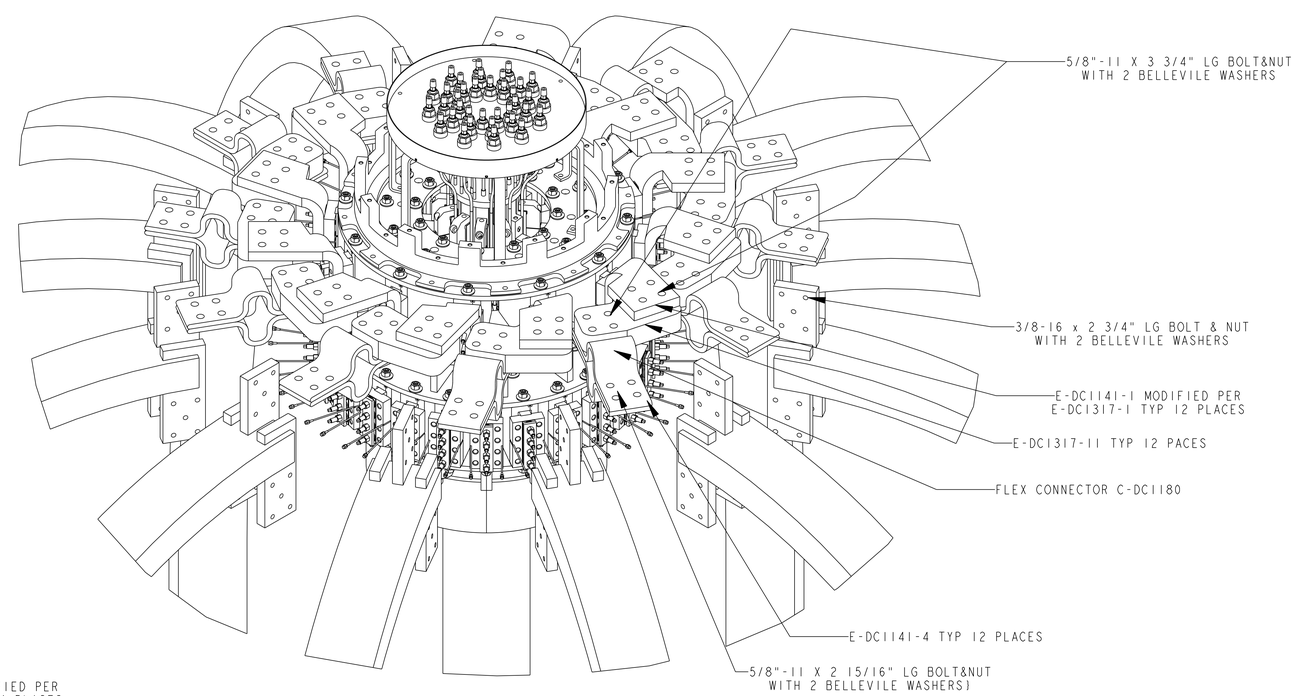

ISOMETRIC VIEW
TOP INNER FLAG CONNECTORS

COMPUTER GENERATED DRAWING MANUAL CHANGES NOT PERMITTED	CENTRAL FILES: UNLESS OTHERWISE SPECIFIED	PRINCETON PLASMA PHYSICS LABORATORY PRINCETON UNIVERSITY NATIONAL SPHERICAL TORUS EXPERIMENT
Pro E	DIMENSIONS ARE IN INCHES MACHINE SURFACES 125	GENERAL ARRANGEMENT MACHINE ASSEMBLY UPPER PF FLAG CONNECTIONS
DO NOT VERIFY INFORMATION BY SCALING DRAWING	BREAK SHARP EDGES .005/.020	
	TOLERANCES NON-CUMULATIVE	DIV: MECH. ENG. / DATE: 12-13-03 / CADD FILE: E-DC1322 .DRW
NEXT ASSEMBLY	DECIMAL-INCH: .X ±.100, .XX ±.030, .XXX ±.005, ANGULAR 10°-15°; FRACTIONS: 0°-12° ±1/16, 12°-72° ±1/8, 72°-120° ±1/4, OVER 120° ±1/2	ENG CHRZANOWSKI / DSN: B.PAUL / CHK: M.KALISH / APPROVED J.CHRZANOWSKI / CHK MK / SUPV JS
		E-DC1322
		SHEET 3 OF 4 / REV 0

WELDING ENGINEER
APPVD: _____ DATE

NSTX-E-DC1322

EMI

NO.	REVISION	BY	CH	SUP	APPROVED	DATE

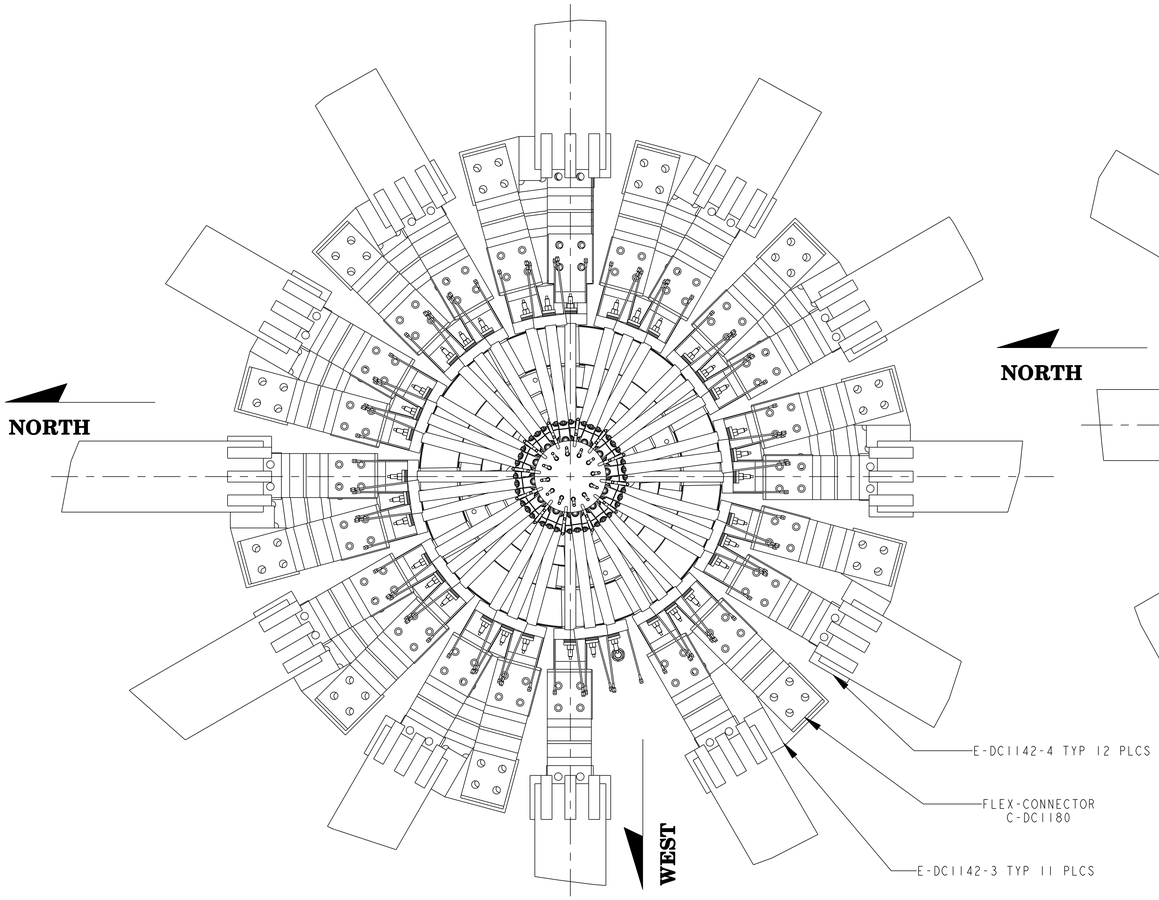

PLAN VIEW
BOTTOM OUTER FLAG CONNECTORS

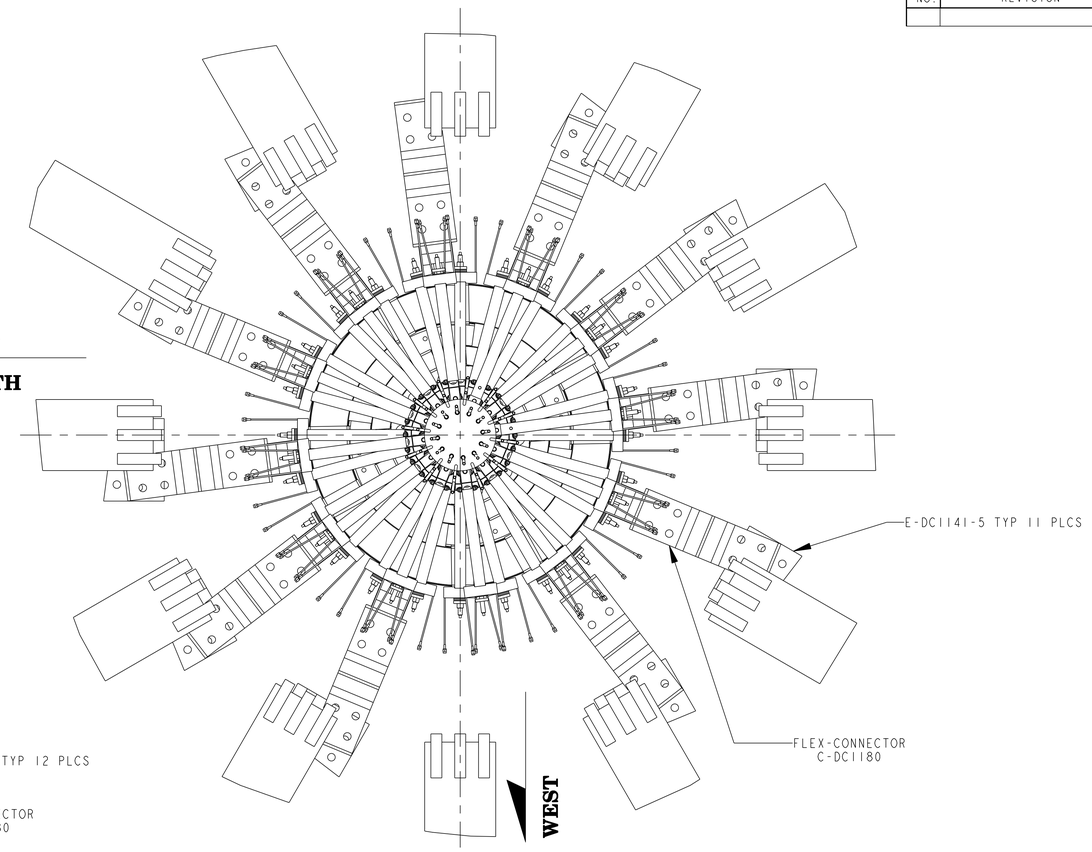

PLAN VIEW
BOTTOM INNER FLAG CONNECTORS

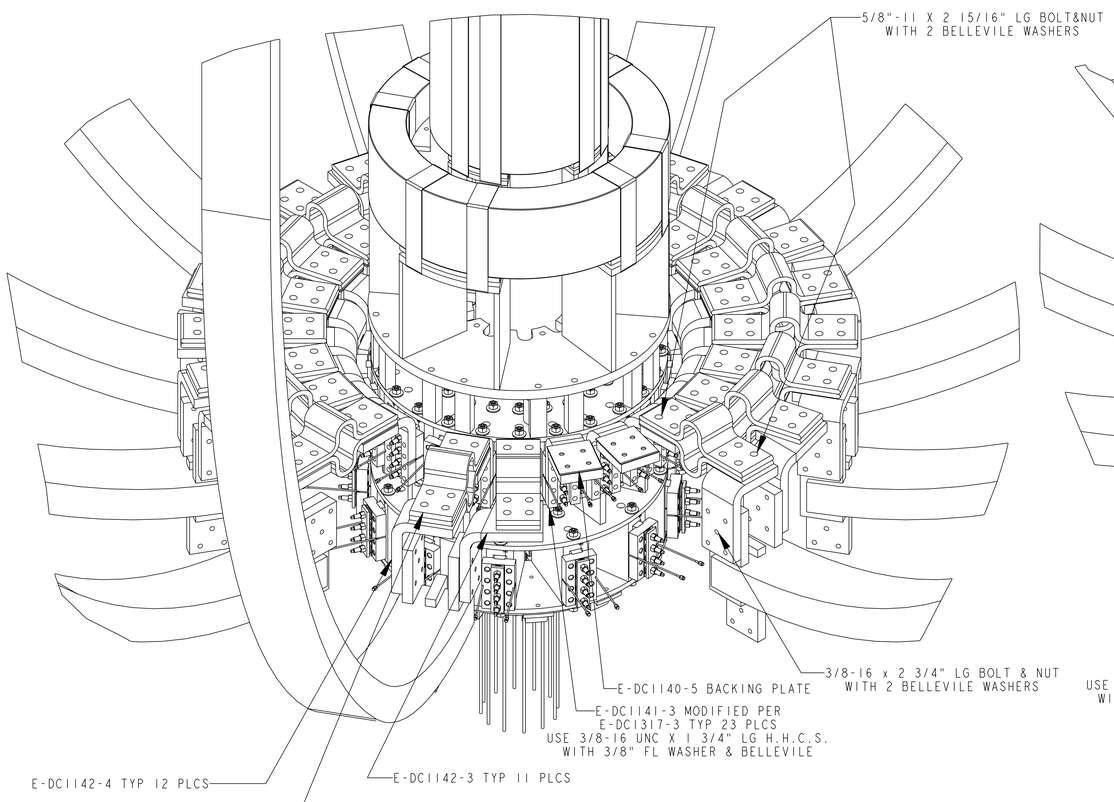

ISOMETRIC VIEW
BOTTOM OUTER FLAG CONNECTORS

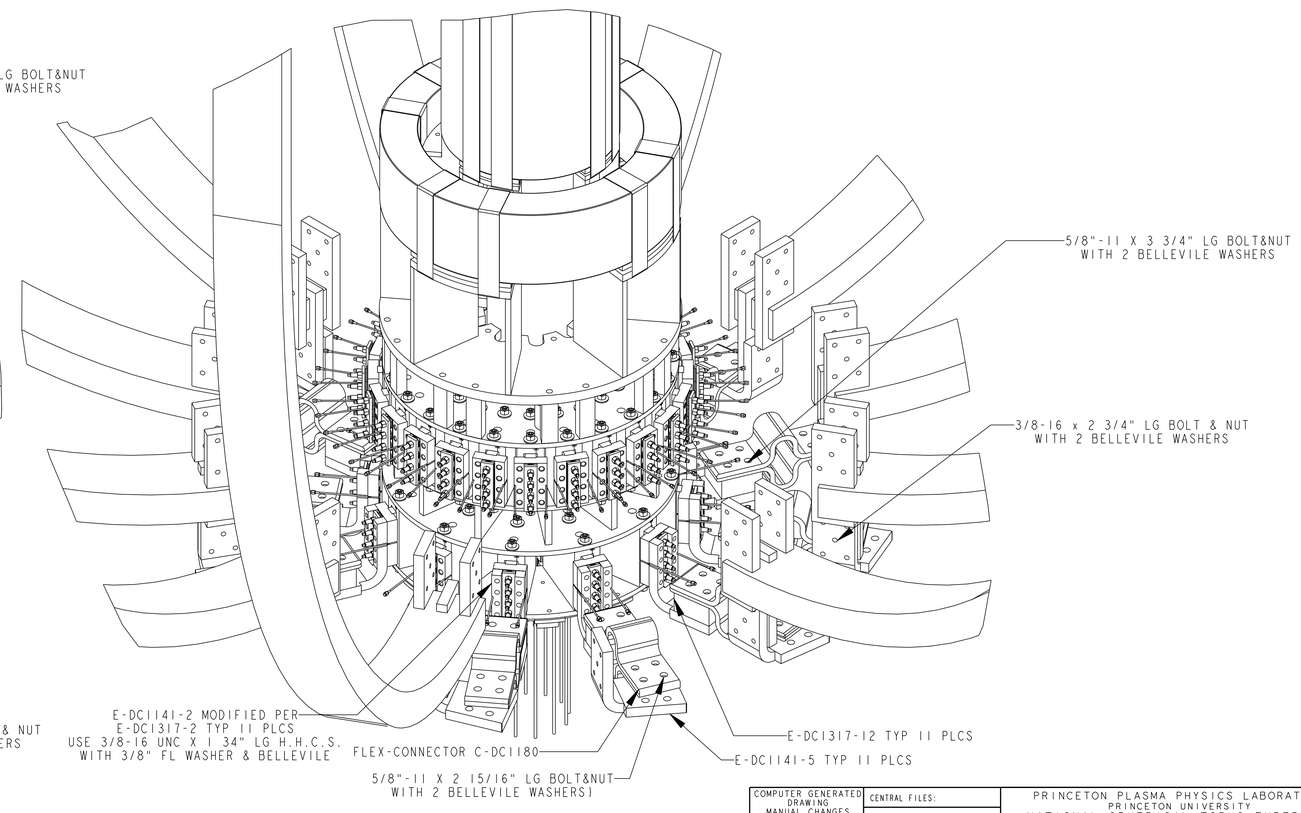

ISOMETRIC VIEW
BOTTOM INNER FLAG CONNECTORS

WELDING ENGINEER
APPVD: _____ DATE

COMPUTER GENERATED DRAWING MANUAL CHANGES NOT PERMITTED	CENTRAL FILES: UNLESS OTHERWISE SPECIFIED	PRINCETON PLASMA PHYSICS LABORATORY PRINCETON UNIVERSITY NATIONAL SPHERICAL TORUS EXPERIMENT
Pro E	DIMENSIONS ARE IN INCHES MACHINE SURFACES 32	TF CORE GENERAL ARRANGEMENT LOWER TF FLAG CONNECTIONS
DO NOT VERIFY INFORMATION BY SCALING DRAWING	BREAK SHARP EDGES .005/.020	
	TOLERANCES NON-CUMULATIVE	DIV: MECH. ENG. / DATE: 12-13-03 / CADD FILE: E-DC1322 .DRW
NEXT ASSEMBLY	DECIMAL-INCH: .X ±.100, .XX ±.030, .XXX ±.005, ANGULAR 10°-15°; FRACTIONS: 0°-12° 1/16, 12°-72° 1/8, 72°-120° 1/4, OVER 120° 1/2	ENG CHRZANOWSKI / APPROVED J.CHRZANOWSKI / DSN: B.PAUL / CHK: M.KALISH / CHK MK / SUPV JS / E-DC1322 / SHEET 4 OF 4 / REV 0

NSTX-E-DC1322