Supported by

Overview of Computing & EPICS at PPL

Paul Sichta

September 2005

Princeton Plasma Physics Laboratory

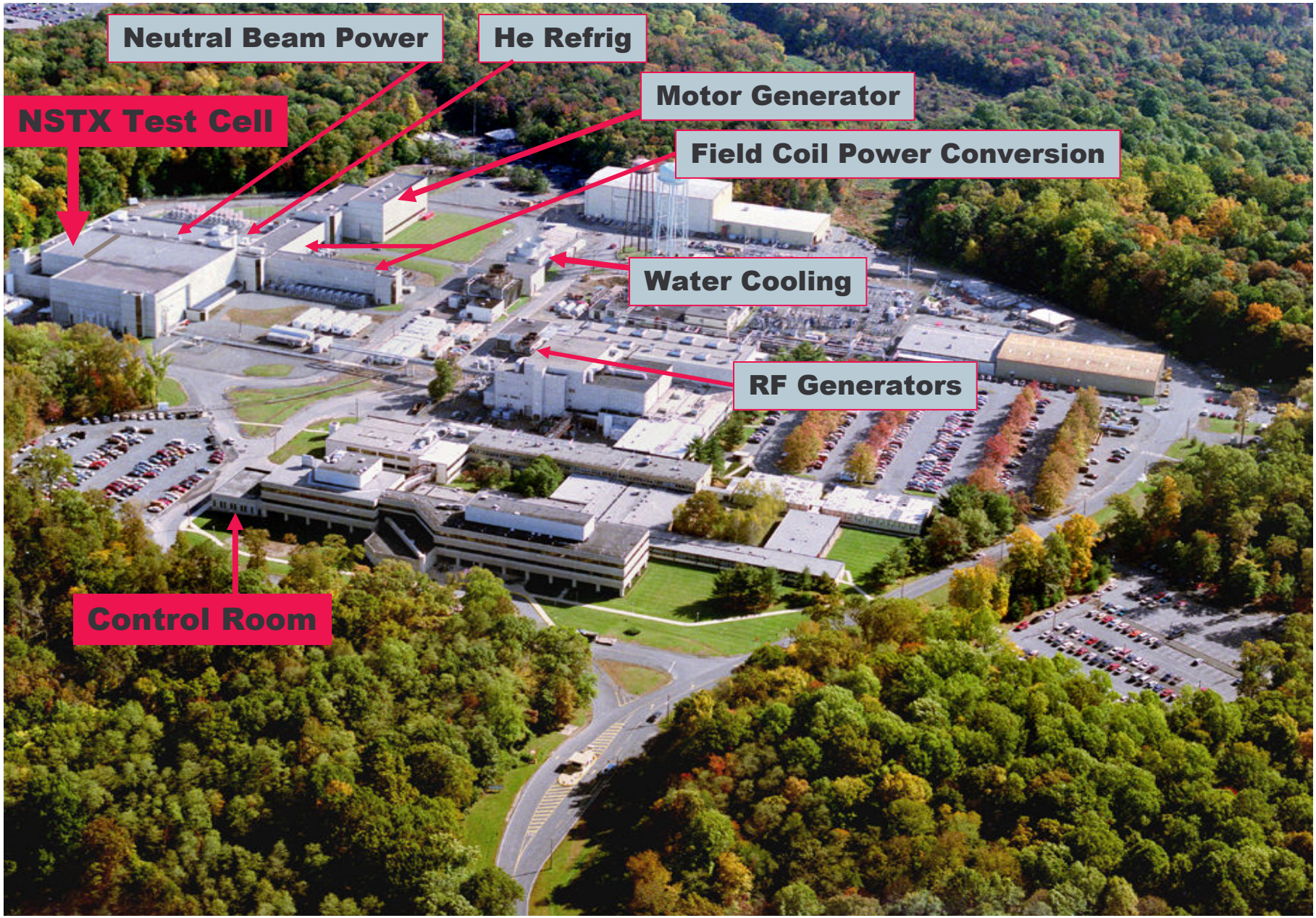

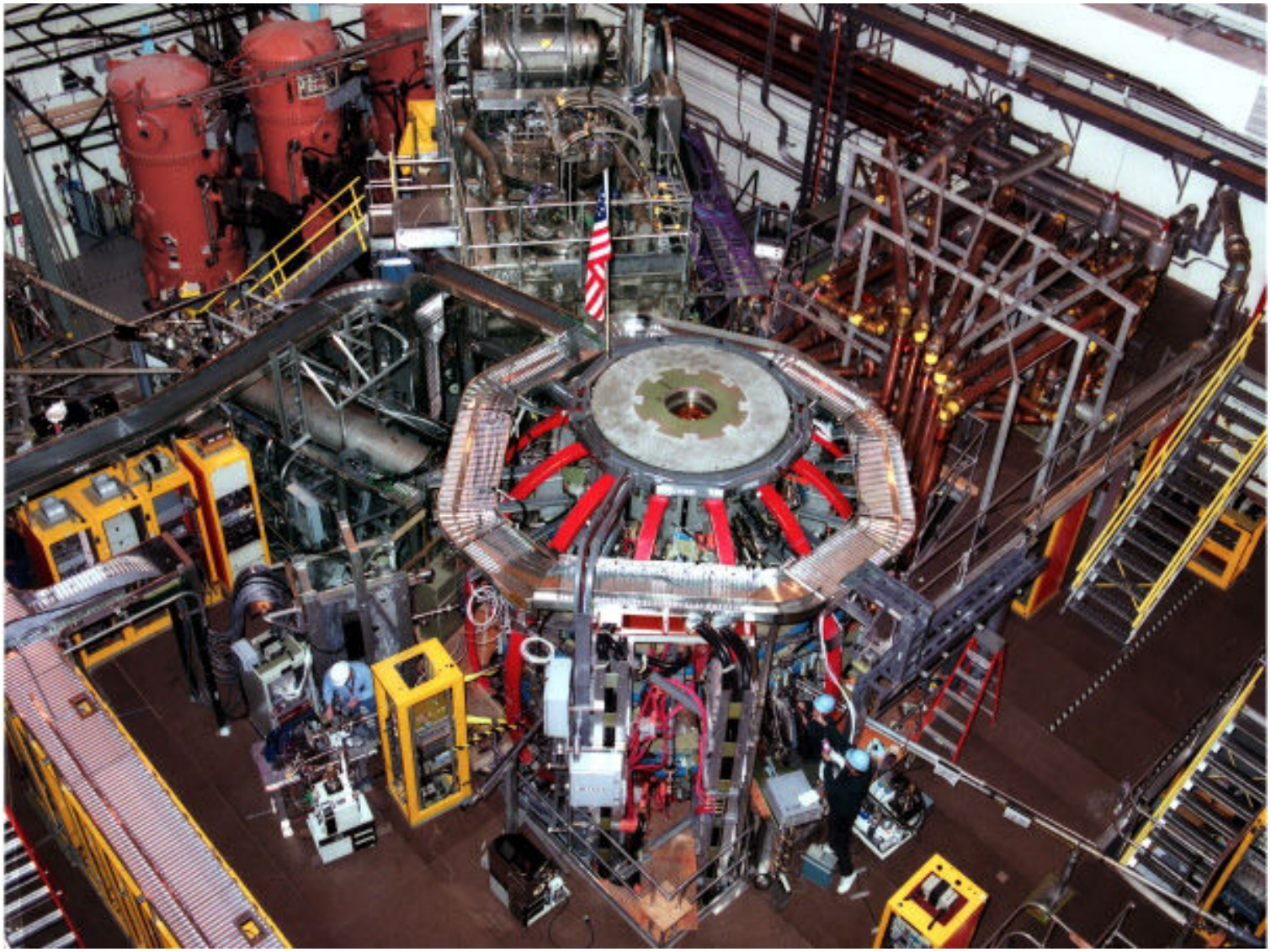

NSTX Machine Parameters

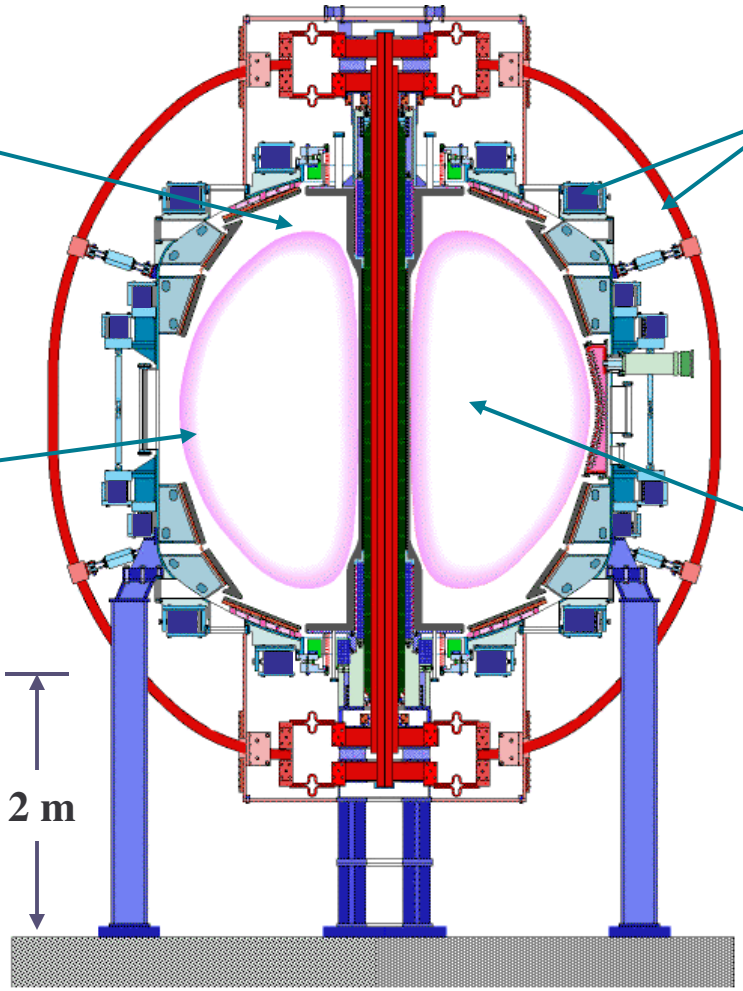

Vacuum System

10^{-8} Torr

Field Coil Power Supply Controls & Water Cooling

Toroidal Field
50 KA
0.65 T

Plasma Control System

Plasma Current
1.4 MA

Plasma Temperature
38 MdegC

Pulse Length
= 1.6 sec

Plasma Fueling & Heating Systems

5 MW NBI
6 MW 'RF'
0.4 MA CHI

Fusion Experiments at PPPL

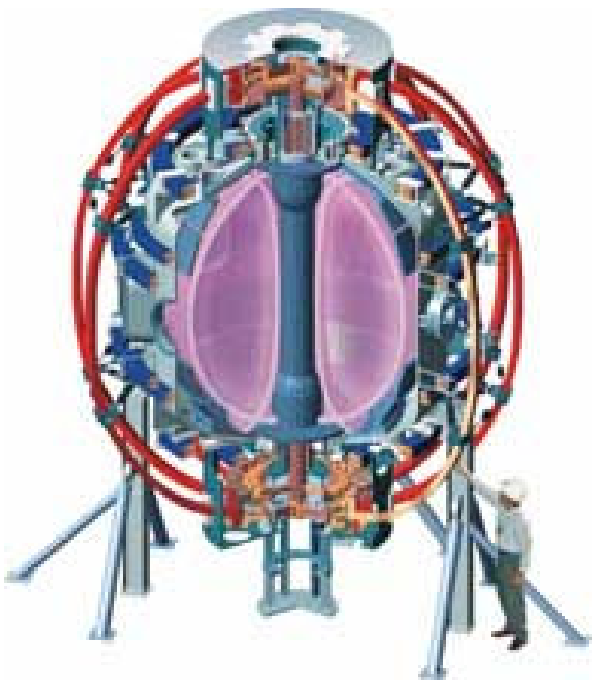

NSTX: 1999

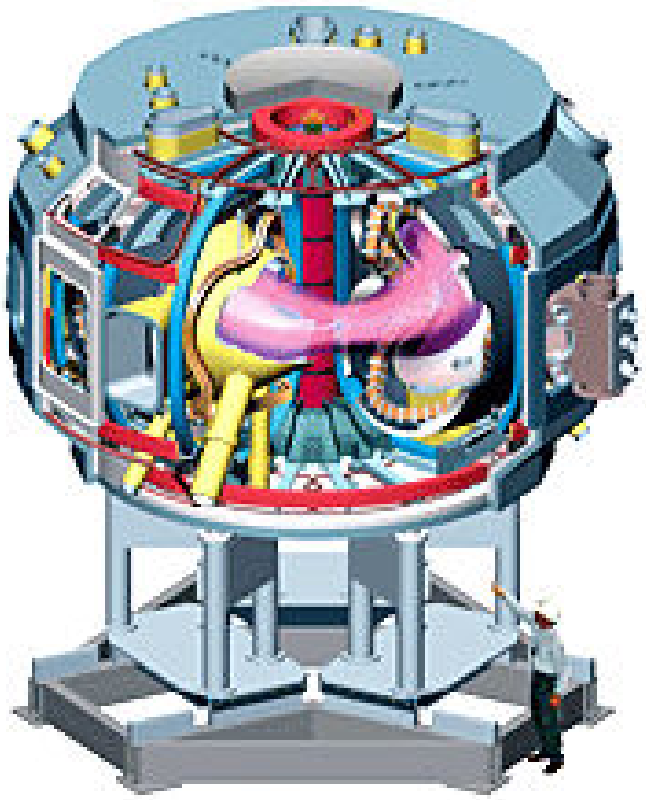

NCSX: 2009

Fusion Experiments at ~~PPPL~~ ORNL

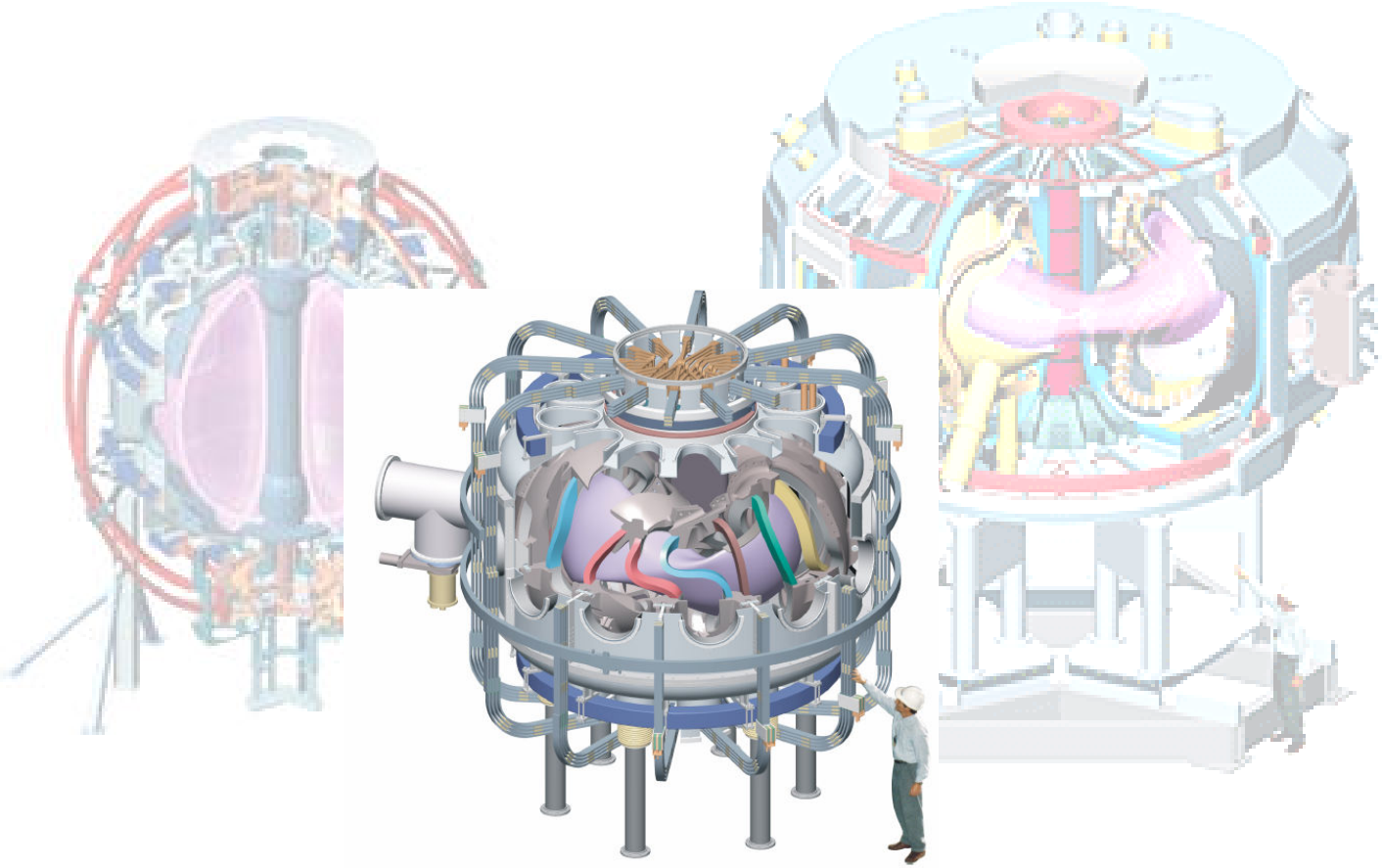

QPS: 2010

ITER

Chinese
Participant Team
European
Participant Team
Japanese
Participant Team
Korean
Participant Team
Russian
Participant Team
USA
Participant Team

ITER - think 'big'

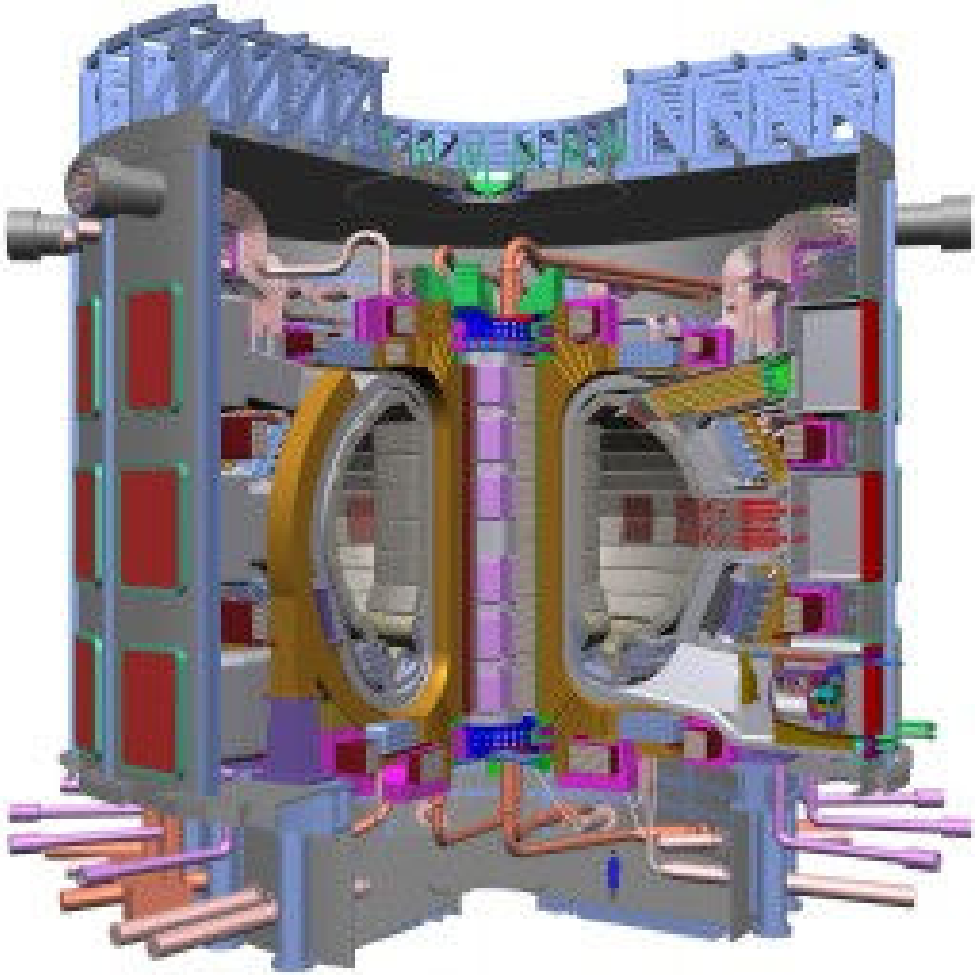

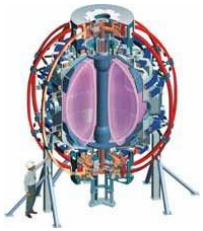

First plasma - 2016

NSTX Computing *Genre*

- Engineering (EPICS)
  - Timing & Synchronization
  - SCADA & Integrated Control (NSTX SubSystems)
- Physics (MDSplus)
  - Diagnostics
  - Offline Codes
- Plasma Control System (real-time)
- Networking
- Control Room

EPICS and MDSplus on NSTX

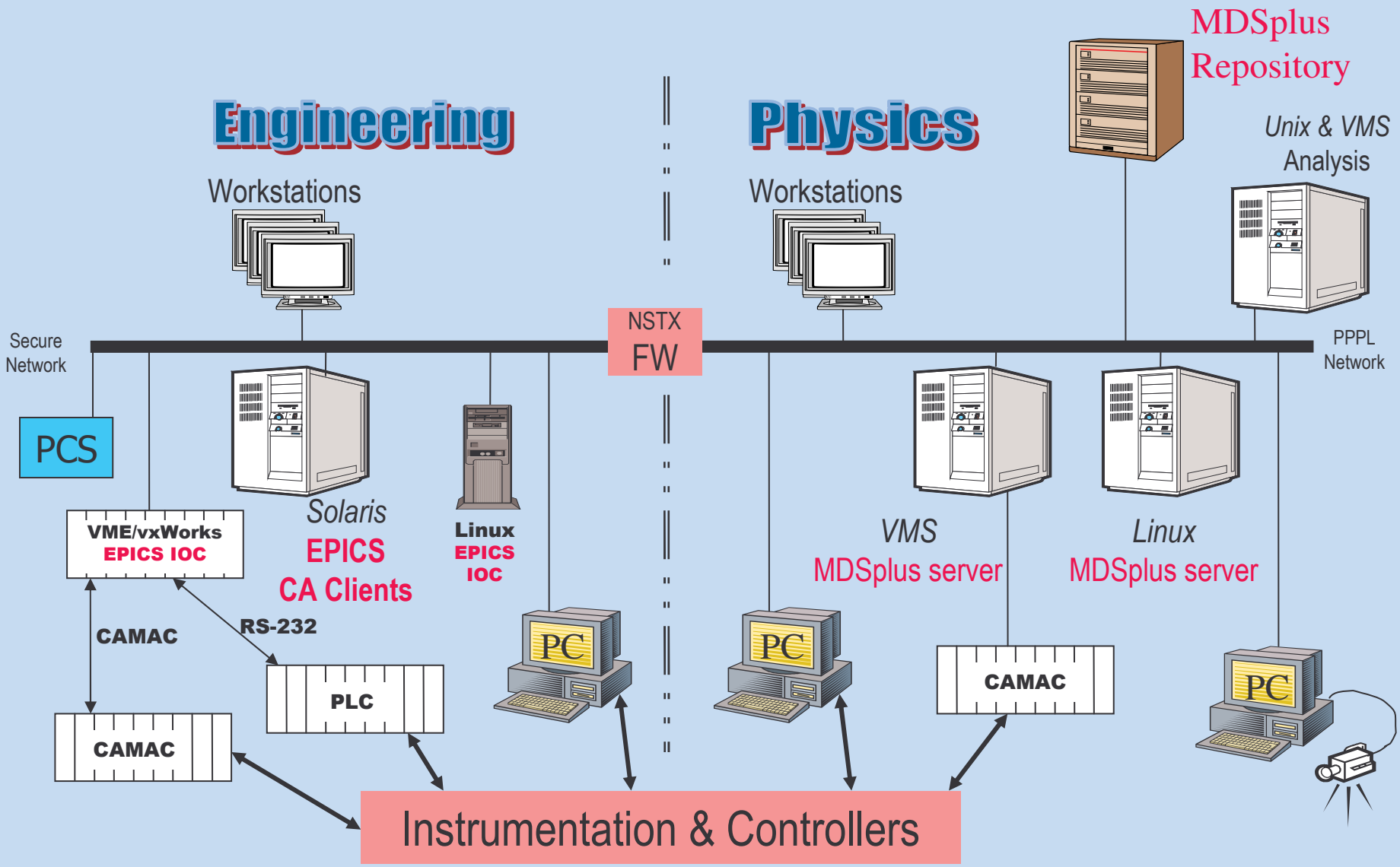

EPICS and MDSplus on NSTX

NSTX

EPICS

Collaboratively developed control systems for scientific instruments

- 4 IOC's
- 135 process displays
- 1800 I/O points
- 8,500 records

MDSplus

Data and Device Management system and for engineering and physics control systems

- 3 MDSplus servers (VMS) 1 linux
- 140 MB per shot
- 5500 waveforms
- 25,000 parameters

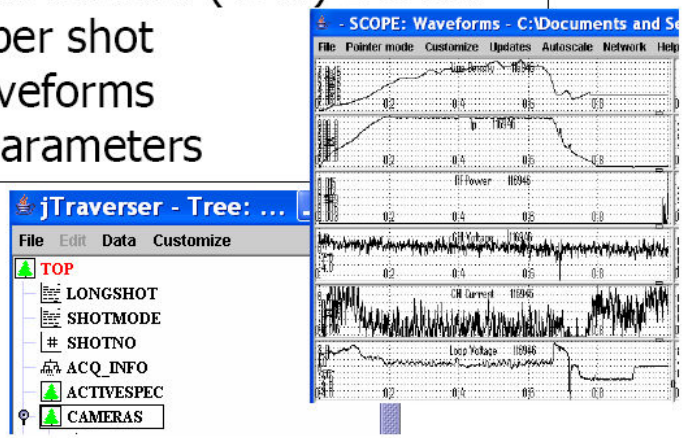

There are new Web-browser Tools for Working with MDSplus Data

NSTX Web Tools - Microsoft Internet Explorer

File Edit View Favorites Tools Help

Back Search History

Address http://nstx.pppl.gov/nstx/Software/WebTools/index.html Go Links

NSTX software

Overview | Programming | Diagnostics | Details

FAQ | Web Tools | UNIX & VMS

Web-based tools for NSTX

FINDING SIGNALS IN LABEL LIST	List of NSTX MDSplus signals and their labels, for searching with Browser 'Find'
FINDING SIGNALS IN TREE	treesearch, search for text, node or TDI
LOGBOOK READ ACCESS	Logbook standard and custom queries, autoupdates, find shots by date, entries by user, etc.
CHECKING DATA LIMITS	mdsShotSearch searches a range of shot numbers for signal data within user-specified limits
PLOTTING NSTX DATA	mdsplots, plot NSTX signals (with overlays) individually or from Scope files.
LISTING DATA VALUES	mdslist, data values in spreadsheet-compatible format
LISTING DATA VALUES	jTraverser, Traverse MDSplus trees and plot nodes (BETA VERSION)

XP/XMP SHOT INDEX

CY2000 Physics XPs

CY2001 Physics XPs

CY2000 Machine XMPs

CY2001 Machine XMPs

SHOT LIST BY DATE

CY2001

CY2000

CY1999

- View control room "VGDS" plots
- Java scope
- Web shot clock

Internet

NSTX Shot Cycle

T(-140) T(0) T(+460)

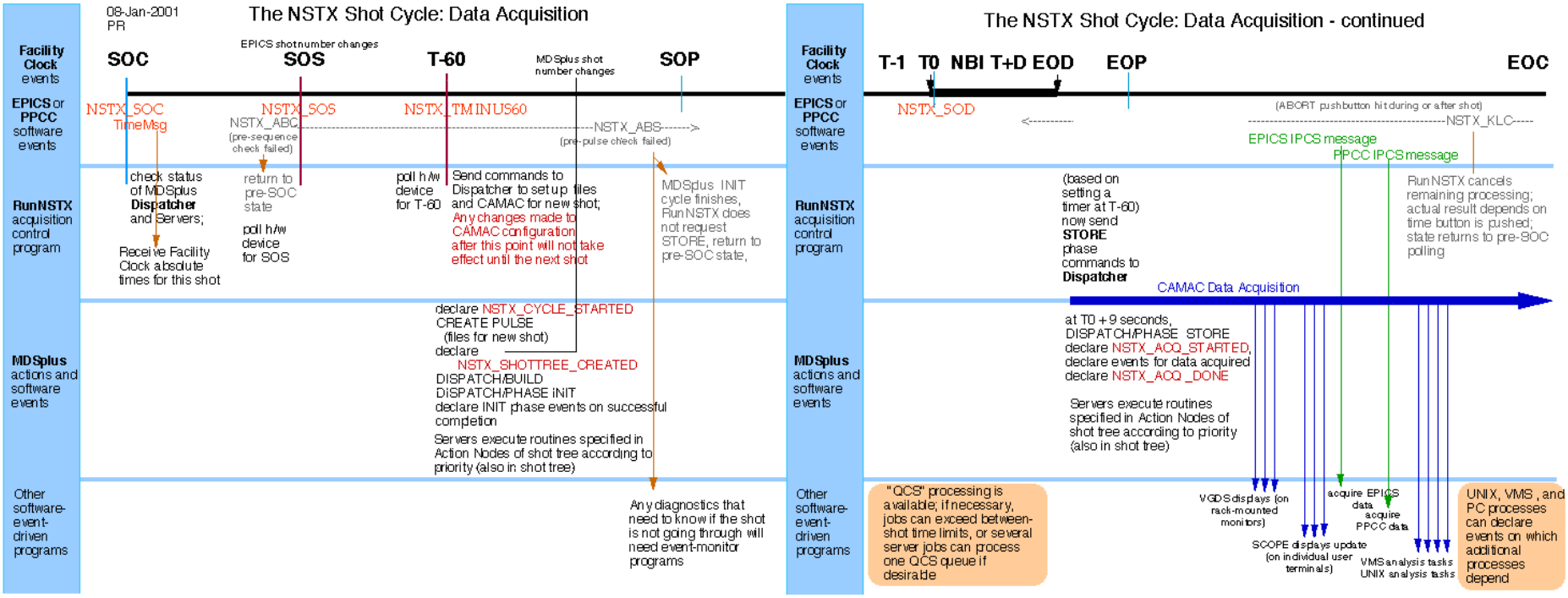

NSTX Timing and Synchronization System

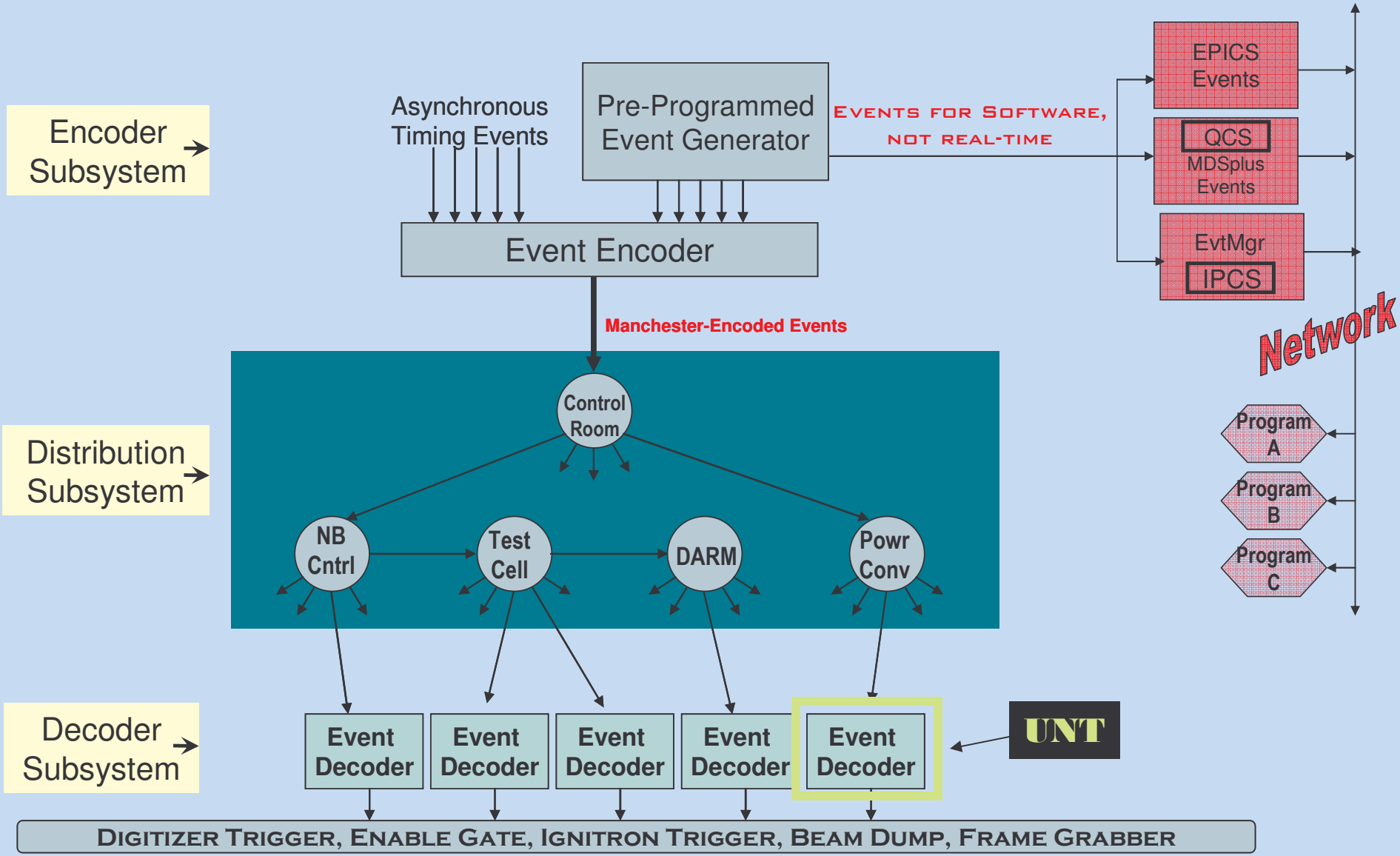

New *Universal Networked Timer*

Emulation of CAMAC Module Timing Functions

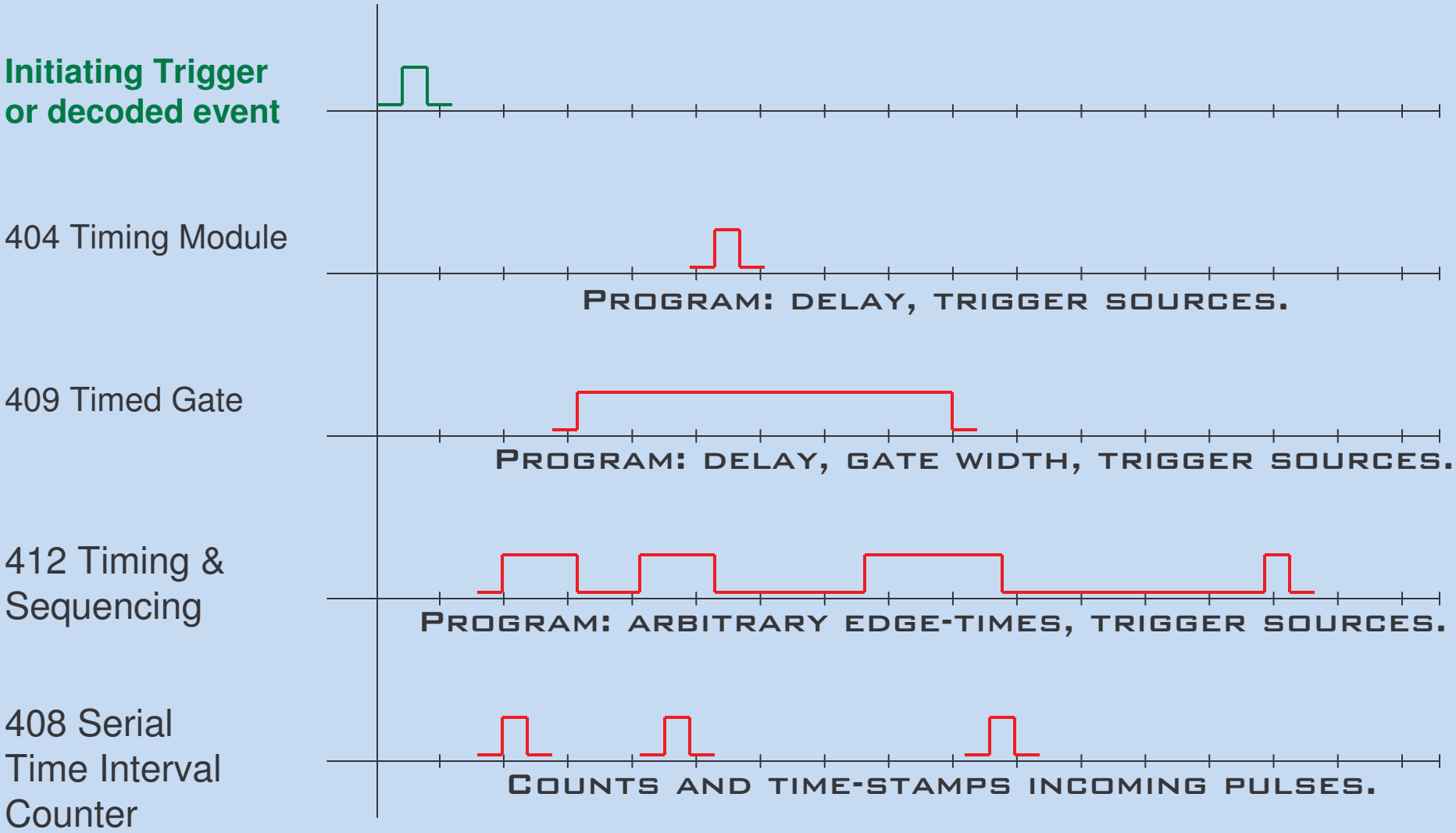

The Plasma Control System is a high-performance real-time control system

- VME-based Control System.

- The Plasma Control System software was developed by *General Atomics*, and is used on their DIII-D fusion experiment.

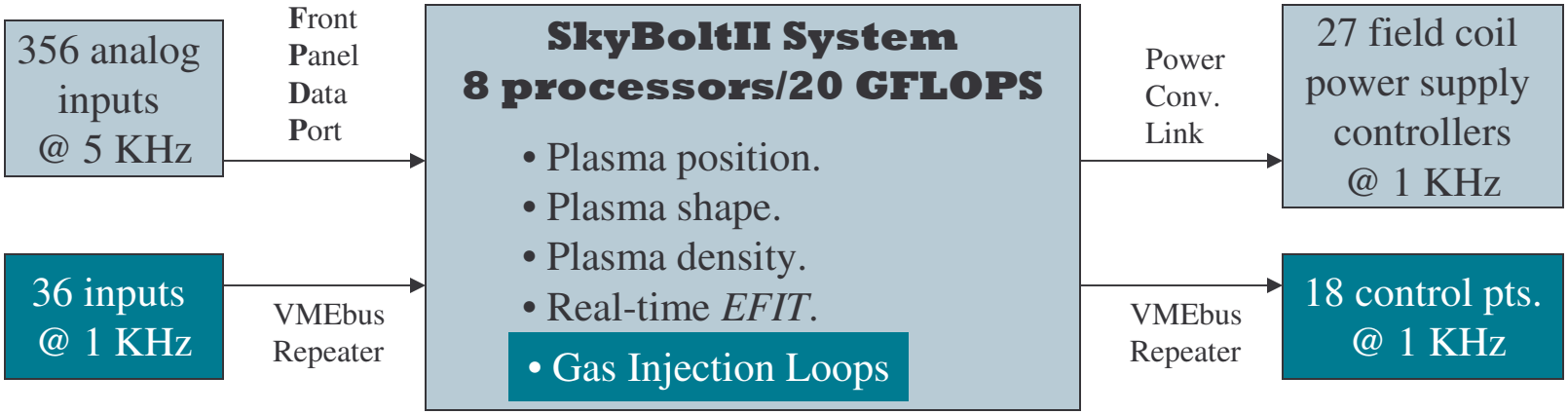

Control system block diagram

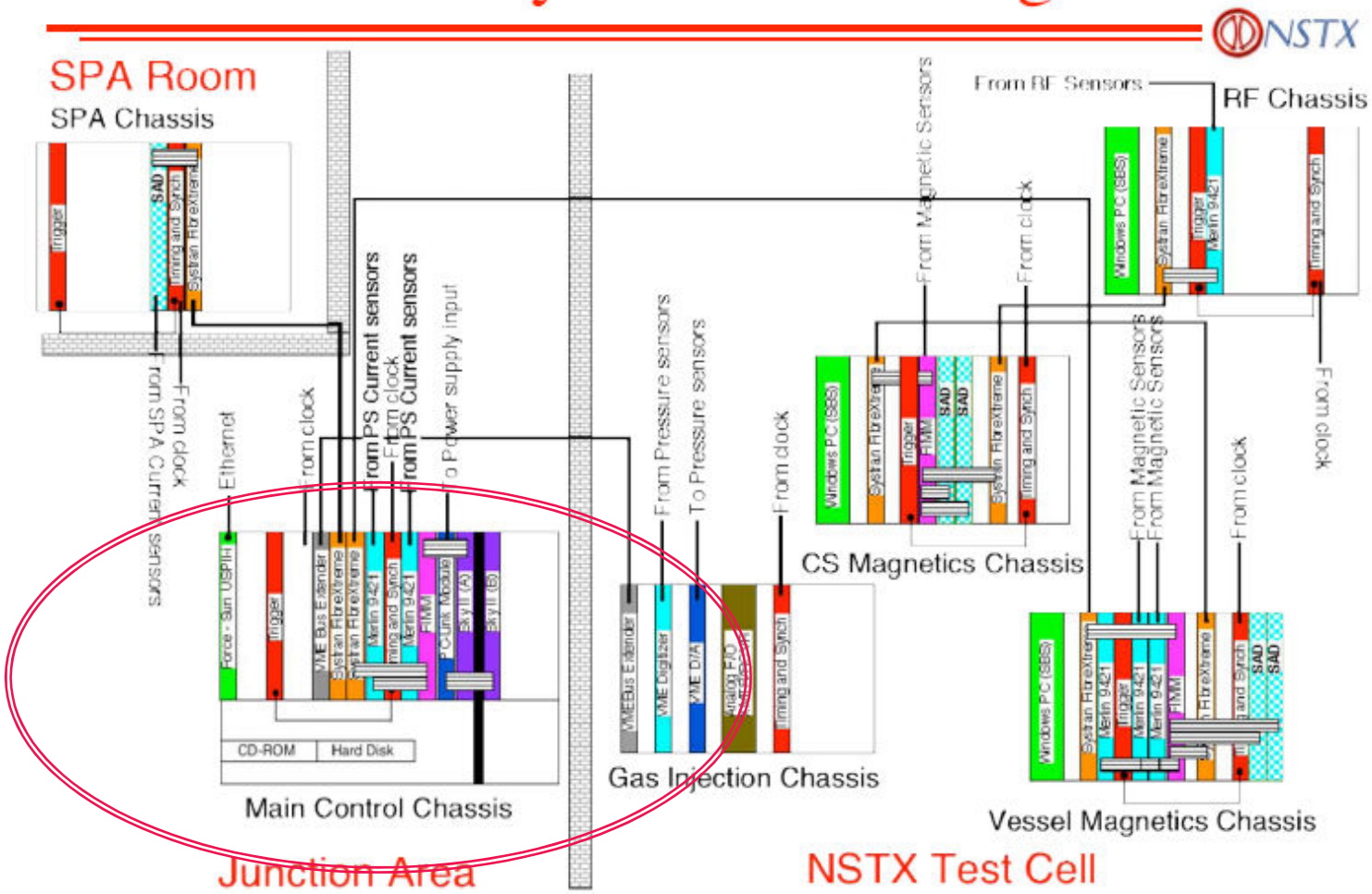

"FPDP" communication standard chosen to support low latency requirement

NSTX

Computers and telemetry

Sky II computer w/ FPDP
Direct Memory Access

(FPDP = Front Panel Data Port)

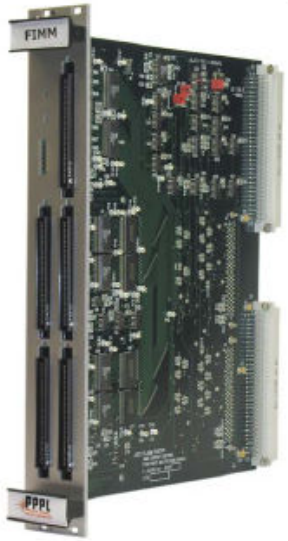

FPDP Input Multiplexing
Module (PPPL) - combines
Signals from four FPDP
sources
(can be daisy chained)

Systran FiberXtreme
converts parallel FPDP to/from
Serial FPDP
F/O transmitter/receiver
1Gbit/s 5 km transmission

Digitizers

NSTX

Input modules

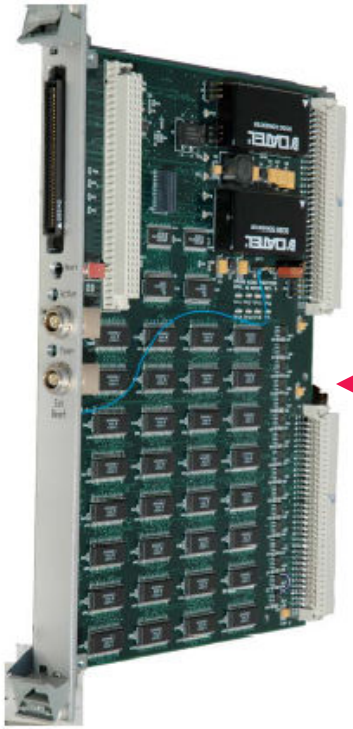

Merlin 9421/9422
12/16-bit digitizer w/
FPDP 1 μsec latency
(can be daisy chained)

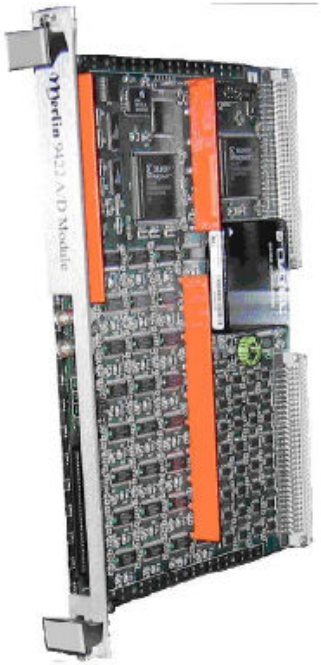

PPPL digitizer Stand
Alone Digitizer (SAD)
Designed to be used in
conjunction with the
FIMM module

Outputs

- PCLIM output module developed at PPPL interfaces 1Gbit/s FPDP to the Power Conversion Link (PCLink) (34 bit communication protocol developed at PPPL in 1974)
- Split the serial link into 4 parallel links to reduce transmission latency to supplies

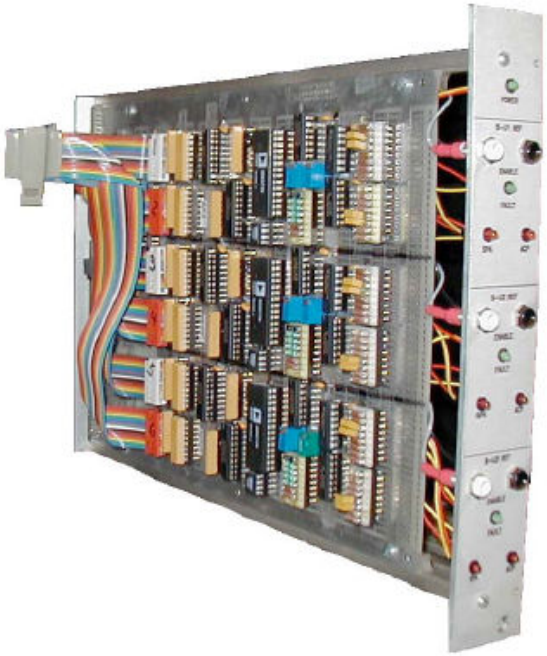

Networking

- Network drops are expensive.
- I expect a rise in inexpensive networked-devices.
- Network group is resistant to low-cost and especially unmanaged (SNMP) switches.
  - They don’t appreciate low-bandwidth applications.
  - 3Com NJ240FX

NSTX Control Room

Proliferating EPICS

Proliferating EPICS

- For casual users
  - Web browser access
  - Java DM?
  - Medm & displays on other computers
  - Windows users who don’t have eXceed.
- MDSplus integration
- Implement more Physics applications
- Liaison Fusion Community

www access to EPICS variables via LabVIEW Webserver

NSTX Machine Status - Microsoft Internet Explorer

File Edit View Favorites Tools Help

Back Search Favorites Media

Address http://nstx.pppl.gov/nstx/Controls/machine.html Go Links

NSTX Machine Status

- **For Historical (Trended) NSTX Status, use the tool Archive Viewer.**

- **Use the hyperlinks below to view the present state of NSTX.**
- **The screen will update every 30 seconds (trends @ 60 sec).**
- **Microsoft's Internet Explorer is the recommended browser.**

- NSTX Torus Conditions (vacuum, temperature, shot clock)
- NSTX Torus Conditions - 4 hour trend (vacuum, temperature)
- NSTX Deionized Water System
- NSTX Fluorinert Cooling System
- NSTX Ground Fault Monitoring System
- NSTX Temperatures
- NSTX Temperatures - 4 hour trend
- CHERS Shutter Status
- MPTS Shutter Status
- NSTX CAMAC & EPICS Status

Page last edited 27JAN2005 by Paul Sichta

Internet

www access to EPICS variables via LabVIEW Webserver

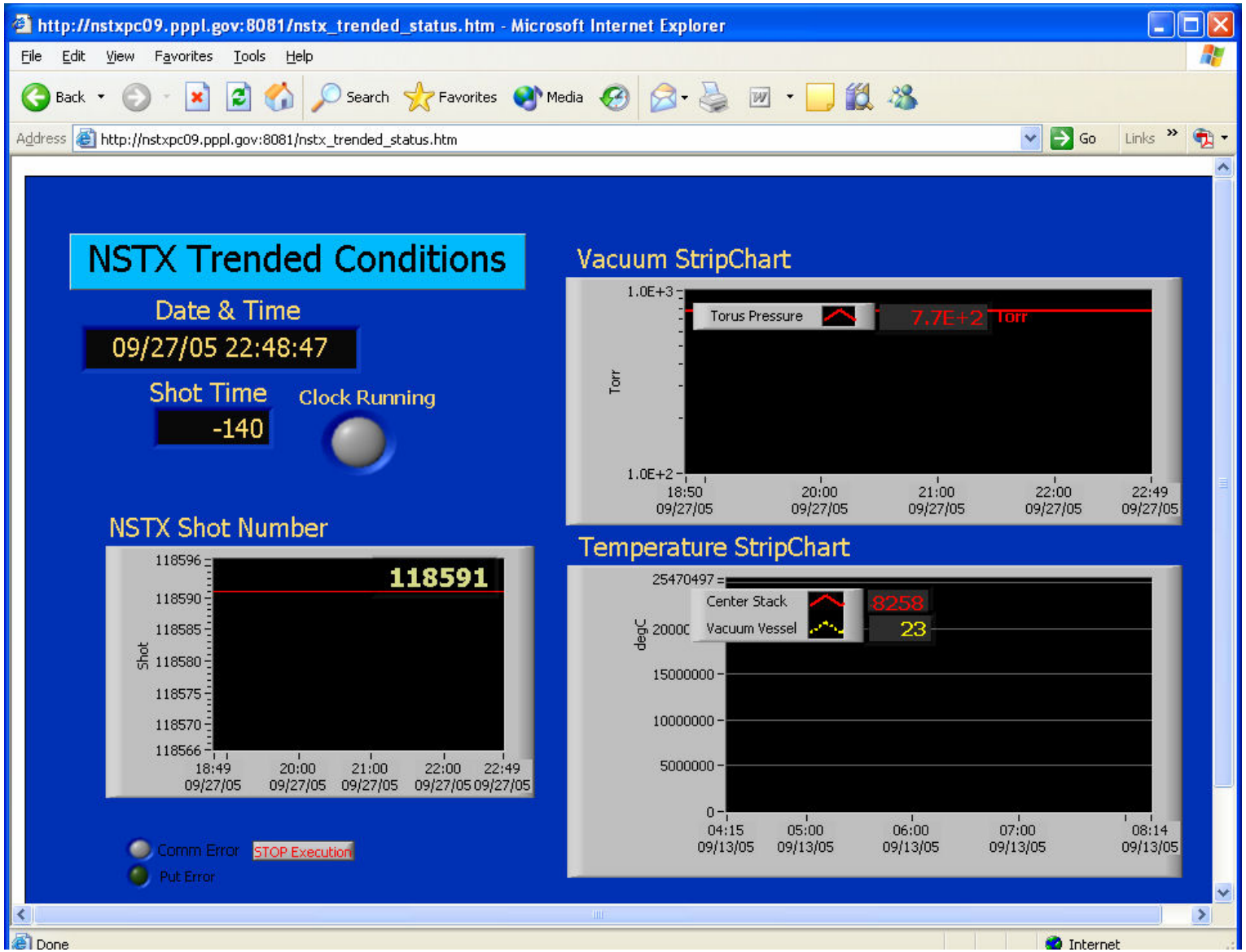

Integrating MDSplus & EPICS

Putting EPICS "Trended Data" into MDSplus

- Save EPICS Archiver (Trended) Data acquired by the EPICS Channel Archiver into MDSplus Daily 'Shot' Trees.

- Permit Trended Data access through familiar MDSplus methods.

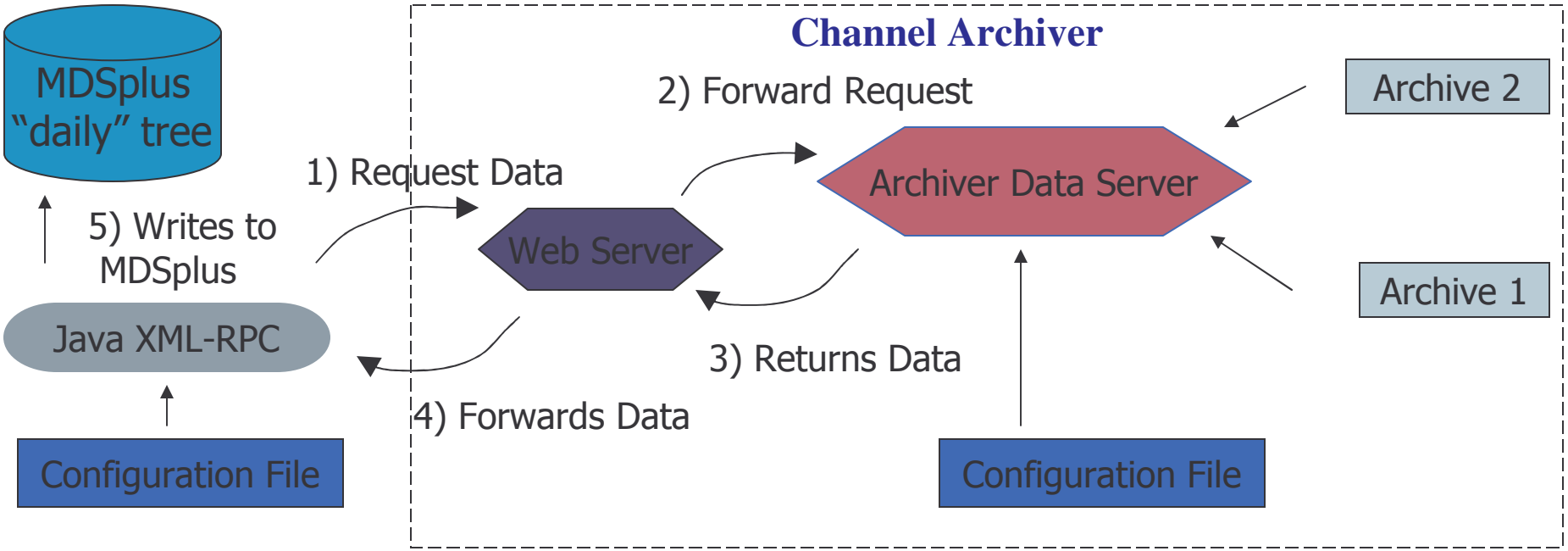

New record types: MDSplus Data Interface

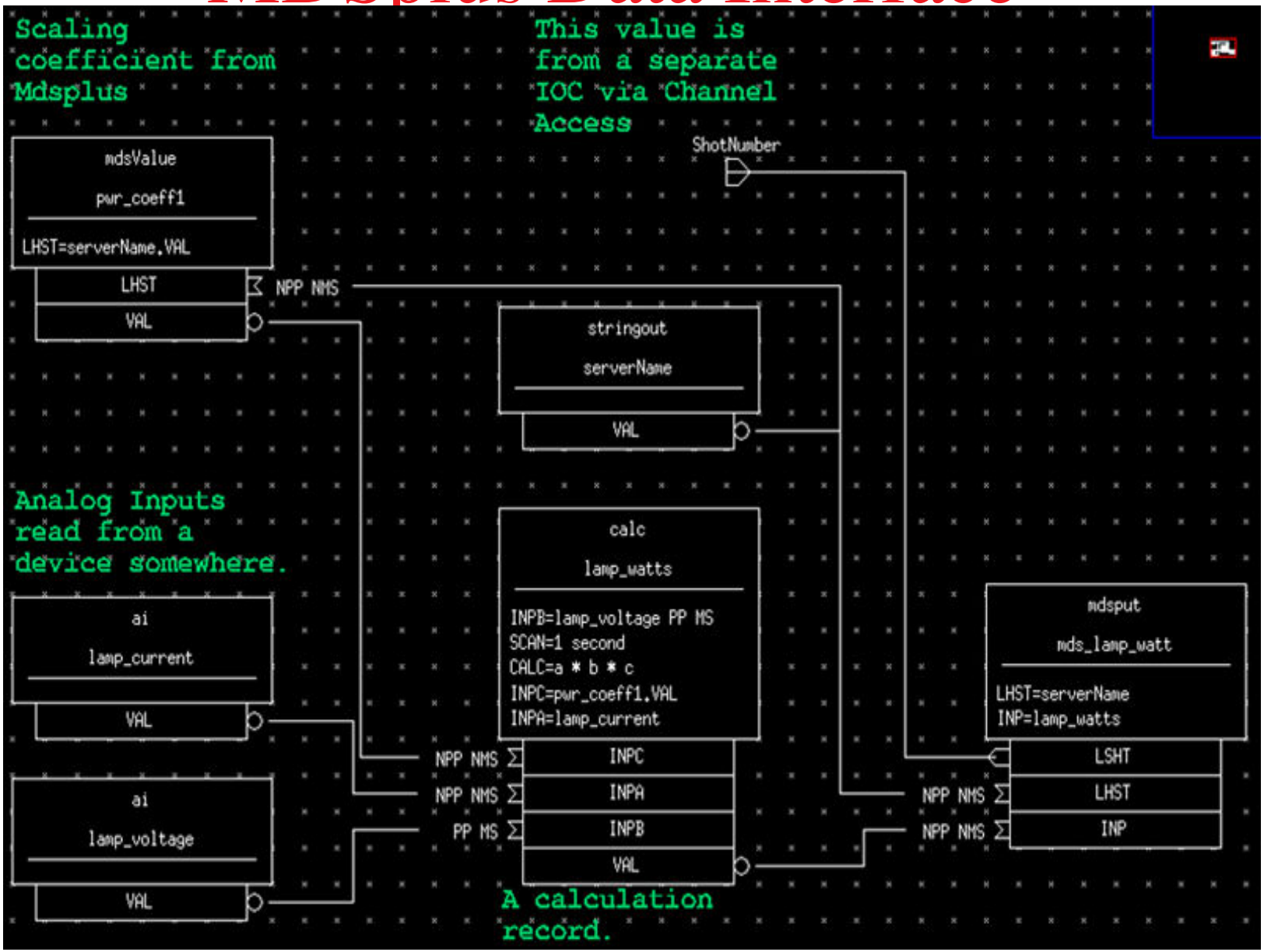

New record types: MDSplus Event Interface

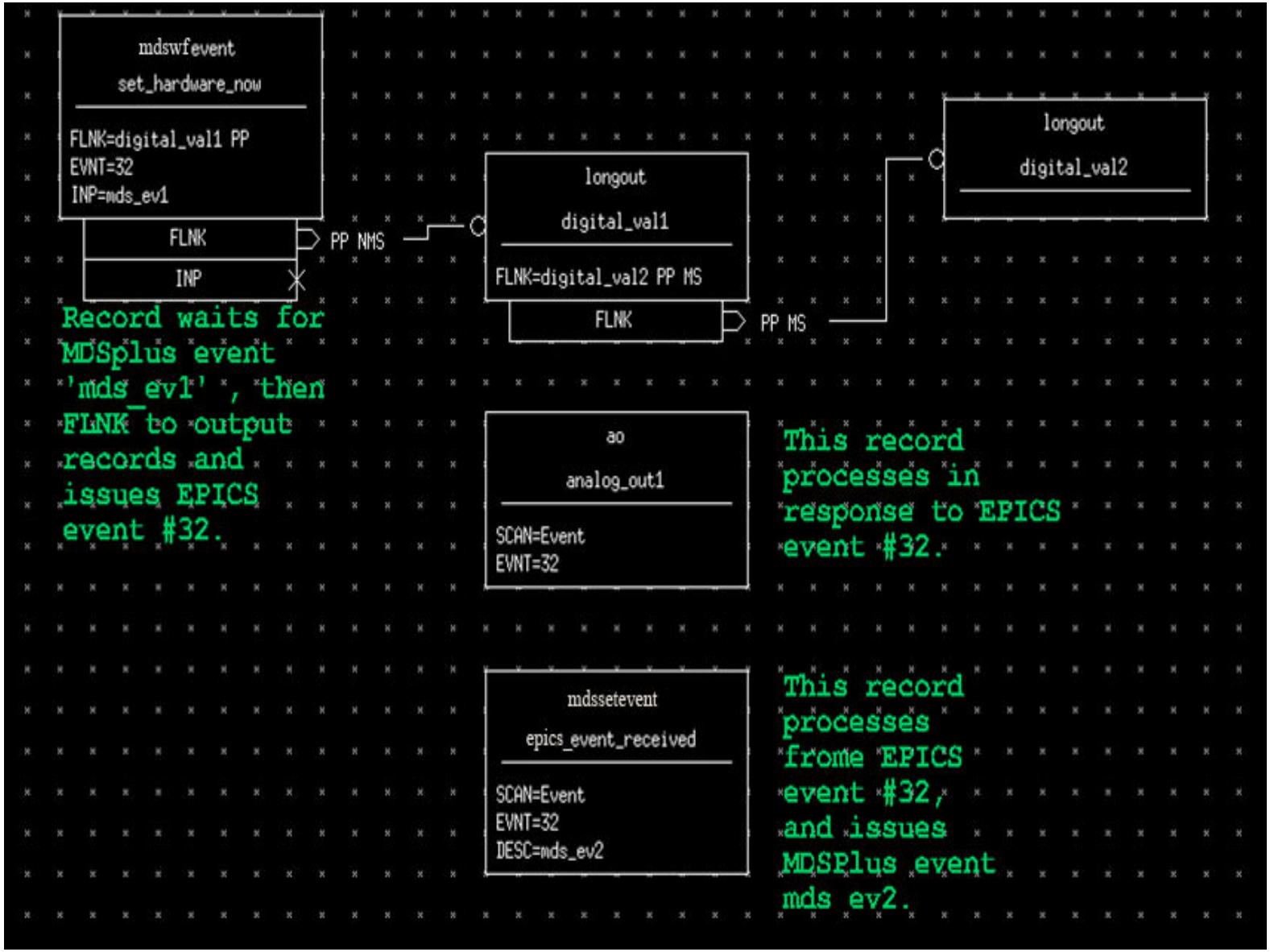

Looking ahead …

- Cyber-security: Hspd-12, remote/home control policies.
  - X-terminal replacement using HP Thin-clients.
- EPICS :
  - Conversion to EPICS 3.14, Solaris-to-Linux.
  - Better integration of EPICS with MDSplus and PCS.
  - Implementation of Soft IOC using Linux, fanless, remote-boot.
  - web-browser tools.
- Clock System:
  - Develop more emulations/functions/applications for the Universal Networked Timer.
- PCS
  - Reliability improvements.
  - InfiniBand-based Linux cluster.
  - Rekindle collaboration.

How secure is the EPICS gateway and IOC Access Security?

The Center for SCADA Security - Microsoft Internet Explorer

File Edit View Favorites Tools Help

Back Search Favorites Media

Address http://www.sandia.gov/scada/home.htm Go Links

SCADA Security

The Center for SCADA Security

Sandia National Laboratories

Program Overview | Engineering Solutions | Vulnerability Assessments | Testbeds

Standards & Industry Outreach/Partnerships | Education & Training

- The Center for SCADA Security Home Page
- Program Overview
- Engineering Solutions
  - Best Practices for SCADA Security
  - Research and Development of Next Generation SCADA Systems
  - Related Links
- Vulnerability Assessments
- Testbeds
- Standards and Industry Outreach/Partnerships
- Education and Training
- Contact Us

Sandia's SCADA security program leverages expertise developed over many years of experience in national security and securing high consequence systems. Sandia is a recognized leader in critical infrastructure protection, cyber security, and energy system solutions.

UTIONS

@sandia.gov

In the News . . .

Framework for SCADA Security Policy

Sandia requested to participate on DHS Control System Security Test Center Leadership

A Reference Model for Control and Automation

Internet

Tell me more …

- Near-term
  - 3.13/Tornado_2.0.x to 3.14/Tornado_2.2
    - gotchas
    - vxWorks driver updates
    - Sequencer update
  - EDM
  - VDCT
- x86 IOC
  - PXE/remote boot of IOCs
  - i/o & drivers
  - PC-104, other fanless solutions?
- Tightly-coupled LabVIEW/IOC status
- Personnel Safety Systems – PLC implementations?
- Control Room - Operators
- PLC communications … OPC?