Experimental Research Operations Plans for CY'01

M.G. Bell

Princeton Plasma Physics Laboratory

presented for the

NSTX Experimental Research Operations Division

NSTX Research Forum

January 15-18, 2001

Topics

- Planned changes in device capabilities (Engineering Division)
  - B_T = 0.6T operation
  - $I_p \approx$ 1.5MA operation
  - Bipolar supply for PF1a
  - NB modulation upgrade
  - High temperature bakeout
- Diagnostic status
- Diagnostic upgrades and development
- Plasma control
- Boundary physics and wall interactions
- HHFW plans

Commissioned 0.6T Operation; Analysis Complete for 1.5MA

- Commissioned TF to full field - $B_T(0.85m) = 0.6$ T with 0.4s flattop
- Recent experiments demonstrated benefits of higher I_p for NB heating
  - confinement improvement and avoidance of NTMs
- Analysis of flux consumption shows we have capability for higher I_p, at least for short pulses
  - Requires some auxiliary heating during I_p rampup
- Engineering calculated acceptable stresses for $I_p = 1.5$MA
  - Will limit $I_p \times I_{TF}$ product to original 71×10^9 A^2 *i.e.* $B_T(0.85m) = 0.4$ T
  - q_{edge} similar to 1.07MA @ 0.3T already achieved
- Completed changes to magnetic diagnostics (Dec-00)

Bipolar Supplies for PF1a Coils; NB Modulation

- PF1a upper/lower coils used for
  - Control of triangularity δ
  - Providing PF null in absorber region during CHI
  - Original 15kA unipolar supplies increased δ, but low inductance of coils led to excessive ripple
  - Now installing, to be ready in February,
    - two +15/-5 kA supplies *and*
    - external inductors for factor 10 ripple reduction
- NB group implementing modulation of sources with capability for
  - "blips" for fast-ion doping and "notches" for background measurement
  - "fractional" sources for power scans
- Analysis complete for operating NB sources at higher voltage (100kV)
  - Possibility for increasing NB power to >6MW if warranted

High-Temperature Bakeout

- Current bakeout:
  - Resistive heating of center column and inboard tiles to ~300°C
  - Pressurized water heating of outer vacuum vessel to 100°C
  - Radiant heating of passive plates (PFCs on outboard side) to ~150°C
- Plasma performance has shown slow secular improvement after each major vacuum vent
- Original bakeout upgrade based on organic fluid deemed unacceptable on safety grounds
- Now settled on pressurized helium system
  - 350°C on PFCs, 150°C on outer vacuum vessel
- Plan for availability in July

Diagnostics Installed 12/00

* Diagnostics in operation *(new in 2000)*

• Diagnostics in commissioning phase

Confinement Studies

* Magnetics for equilibrium reconstruction
* *Diamagnetic flux measurement*
* *Thomson scattering (10 ch., 30Hz)*
* 2 mm interferometer (single chord)
* VB detector (single chord)
* Midplane tangential bolometer array
* X-ray crystal spectrometer
* X-ray pulse height analyzer
• CHERS: T_i and v_ϕ (18 ch.)
• Electron Bernstein wave radiometer
• Neutral particle analyzer (central chord)
• FIReTIP interf'r/polarimeter (2 ch.) *[UCD]*

MHD/Fluctuations

* *High-n and high-frequency Mirnov arrays*
* Soft x-ray arrays (3) *[JHU]*
* *Edge reflectometer [UCLA]*
* *Visible edge fluctuation imaging [LANL]*
* *Fast ion loss probe*

Plasma Monitoring

* Fast visible camera *[LANL]*
* *VIPS-1: Visible survey spectrometer with reticon array*
* *Fission chamber neutron measurement*
* *Fast neutron measurement*
* *1-D CCD camera H_α monitor*
* Visible filterscopes *[ORNL]*
* Scrape-off layer reflectometer *[ORNL]*
* *GRITS: VUV spectrometer [JHU]*
• IR camera
• VIPS-2: Visible survey spectrometer with CCD detector
• SPRED: UV spectrometer with CCD detector

Diagnostic Upgrades in CY'01

- Locked mode coils *installed, ready for commissioning*
- Thomson scattering ⇒ *60Hz, 20 ch.*
  - *additional laser (Feb. delivery), 10 new polychromators (Jul. installation)*
- IR camera ⇒ *additional cameras and views (currently prototyping)*
- Fast ion losses ⇒ *probe with E, pitch angle resolution (next opening)*
- CHERS ⇒ *~75 ch. in conjunction with MSE collection optics (Sep.)*
- MSE polarimeter (CIF) 2 ch. Sep ⇒ 10 ch. FY'02 *[Nova]*
  - optics being procured and tested
- Fast scanning edge probe *[UCSD] (Sep.)*
- Neutral particle analyzer ⇒ *horiz., vert. scan.*
- FIReTIP ⇒ *7 ch. [UCD]*

Diagnostic Development CY'01

- Improving reliability and signal quality
  - Resolve diagnostic grounding issues (with Engineering Division)
  - More robust coils for B_{pol} measurements, particularly on center stack
  - New microwave interferometer design
    - single frequency chirped source and detector *[UCLA]*
- X-ray imaging diagnostics
  - Pinhole camera for internal flux surface shapes *[with U. Wisconsin]*
  - Fast (MHz) tangential x-ray camera *[PSI]*
  - Improved detectors and new compact arrays for poloidal views *[JHU]*
- Divertor imaging with fast visible camera *[Hiroshima U.]*
- Laser Induced Fluorescence MSE polarimeter *[Nova]*

Control System Upgrade Hardware

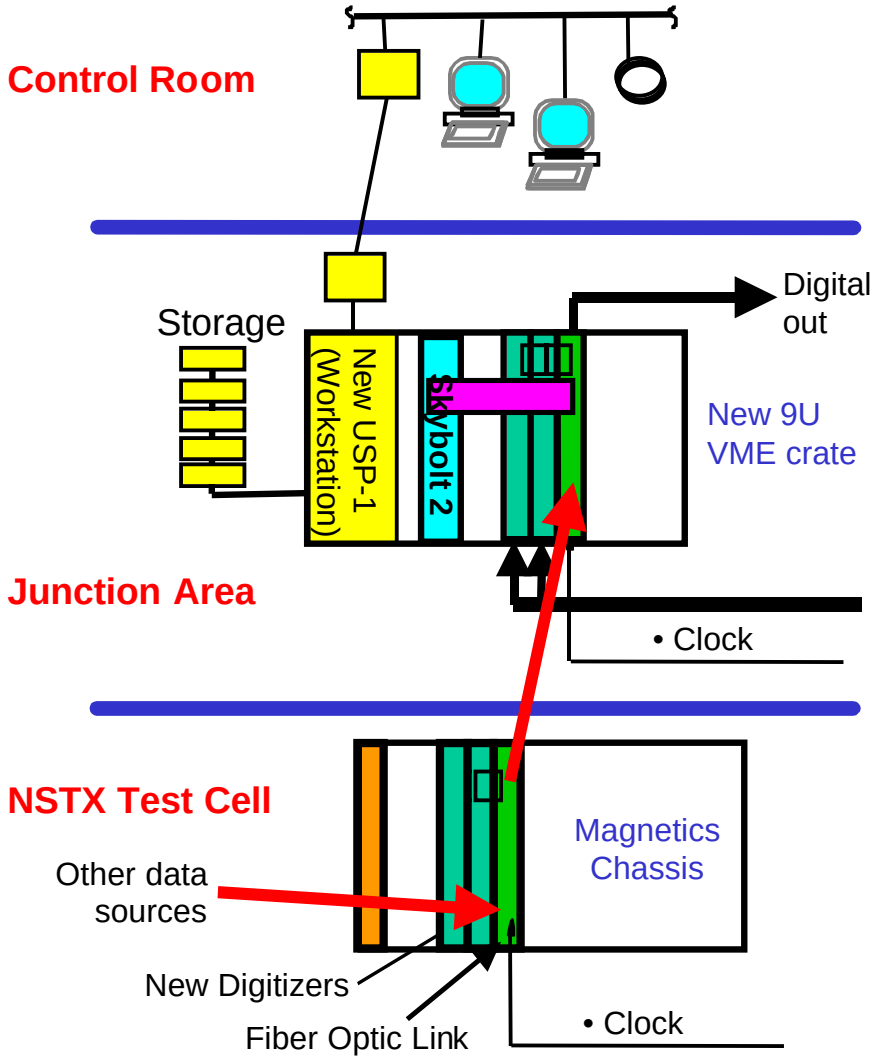

- High Speed low-latency digital data acquisition FPDP + Fiberchannel
- "Skybolt 2" computer (4 G4 processors at 333MHz ⇒ 10GFlop)
- Expandable up to 64 processors in one chassis
- Up to 768 channels of data
- 50MB/s sustained data rate

Status of New Real-Time Control System

- New computer installed and being tested with
  - Same inputs as present system
  - Existing control software
- Initially operate in parallel and then phase into use during next run
- New DA hardware received and tested except fast fiber optic data link
  - Expected soon and will be installed as soon as available
- Plan to implement additional control functions during spring shutdown
  - Include κ, δ
  - Gas feed: additional data link hardware required
- rtEFIT under development *(talk by J. Ferron, Parallel session 1)*
- Algorithms for CHI startup and transition to inductive sustainment require research and development

Boundary Physics Operations Activities in CY'01

- IR Imaging of Plasma Facing Components
  - Observe Center Stack Tiles, Lower Divertor, NB Armor, RF Antenna, RF Limiter
  - Testing Alpha Indigo camera with magnetic shield
- Boronization using Trimethylboron fuelling in normal discharges
  - Re-boronize eroded surfaces more directly
    - TEXTOR: TMB improved plasma performance
    - PISCES: High deposition rates with carborane
- Boron & Lithium Low Velocity Pellet Injector
    - Edge and core transport measurements
    - Wall conditioning studies
  - Similar to CDX-U injector for tangential or radial injection of B/Li

Boundary Physics Activities (cont.)

- Edge Neutral Pressure Measurements
  - Implement RGA scanning during discharges
  - Commissioning 5 fast Penning gauges in divertors & at midplane
- Quartz Crystal Deposition Probe
  - Deposition/erosion during boronization/operation
- Fixed Langmuir Probe Array Development
  - Evaluate the 2 instrumented channels at various probe locations
- Conceptual study for Divertor Bolometry
  - Absolutely calibrated, broad-band 2D system
  - High spatial-resolution, fast 1D or 2D system
- Conceptual study for Edge Cryopump

HHFW Development in CY'01

- Near-term plans
  - Implement closed-loop phase control
    - complete optical link for phase signals from antennas to existing phase locking electronics in transmitter room
  - Design/execute experiments to study heating dependence on $\mathbf{k}_{||}$
  - Calibrate tuning system elements accurately to allow faster matching to new conditions
  - Complete transmission-line gas system to allow flushing and remote filling
- Plans for spring/summer opening
  - Reinstall quarter wave transformers with lower impedance ratio
    - allow more aggressive operation by reducing concern about arcing
  - Develop an arc localization system *[with ORNL]*

Summary

- We expect further significant operational improvements for CY'01
  - Enhanced machine capabilities: 1.5MA, bipolar PF1a, 350°C bakeout
  - Improved control system: κ, δ, gas feed, ... $\Rightarrow$ rtEFIT
  - Improved wall conditioning: bakeout, advanced boronization
  - New and improved diagnostics:
    - upgraded MPTS, CHERS, MSE, multi-chord interferometry, scanning NPA, LM coils, comprehensive spectroscopy, edge measurements
  - Routine operation of HHFW system with advanced capability
    - real-time phase control
- There are significant challenges too
  - CHI control
  - Providing coverage for a multitude of experimental demands