Google:[Leonid Zakharov] ⟶ http://w3.pppl.gov/~zakharov

Understanding disruptions in tokamaks[1,2]

Leonid E. Zakharov

Princeton Plasma Physics Laboratory, MS-27 P.O. Box 451, Princeton NJ 08543-0451

Sergei N. Gerasimov, Mike F. Johnson, Valeria Riccardo

JET-EFDA, Culham Science Centre, OX14 3DB, Abingdon, UK

NSTX Results/Theory Review, September 16, 2009

PPPL, Princeton NJ

[1]Partially supported by US DoE contract No. DE–AC020–76–CHO–3073.
[2]Partially this research has been performed under the European Fusion Development Agreement and was partly funded by the UKAEA, the UK Engineering and Physical Sciences Research Council and by the European Communities under contract of association between EURATOM and UKAEA

PPPL PRINCETON PLASMA PHYSICS LABORATORY

Contents

1 Understanding kink modes 4

1.1 Classical kink mode m/n=1/1 5

1.2 Surface current 6

1.3 Electro Motive Force for surface currents 8

1.4 Kink modes m>1 9

1.5 Shafranov's stability diagram 10

1.6 Effect of conducting shell 12

2 Physical and "equivalent" walls 14

3 Hiro currents 18

3.1 Forces and toroidal asymmetry 21

3.2 Hiro currents are not halo currents 22

3.3 Current spikes in disruptions 24

3.4 Hiro currents in vertical instability 25

4 Sequence of events in disruptions 26

5 Measuring Hiro currents 27

6 Summary. 29

Abstract

It was realized recently that the electric current sharing between plasma and the wall during disruptions plays a crucial role in kink mode dynamics. Observation of toroidal asymmetry in plasma current measurements during vertical disruption events on JET in 1996 was obviously inconsistent even in the sign of the effect with a "naive", but widely accepted, interpretation based on "halo" currents going to the wall. The puzzle has been resolved by the theory of a wall touching kink mode, which suggests that another currents, excited by the kink mode m/n=1/1 and called "Hiro currents", are responsible for asymmetry.

The present talk explains that the same Hiro currents, generated by m > 1 kink modes during conventional disruption, are responsible for observable positive plasma current spikes (and negative voltage spikes), which for 46 years has been an outstanding unresolved puzzle in tokamak physics. In particular, the new level of understanding of the tokamak disruptions gave a clean way of scaling the disruption forces from JET disruptive shots to ITER.

1 Understanding kink modes

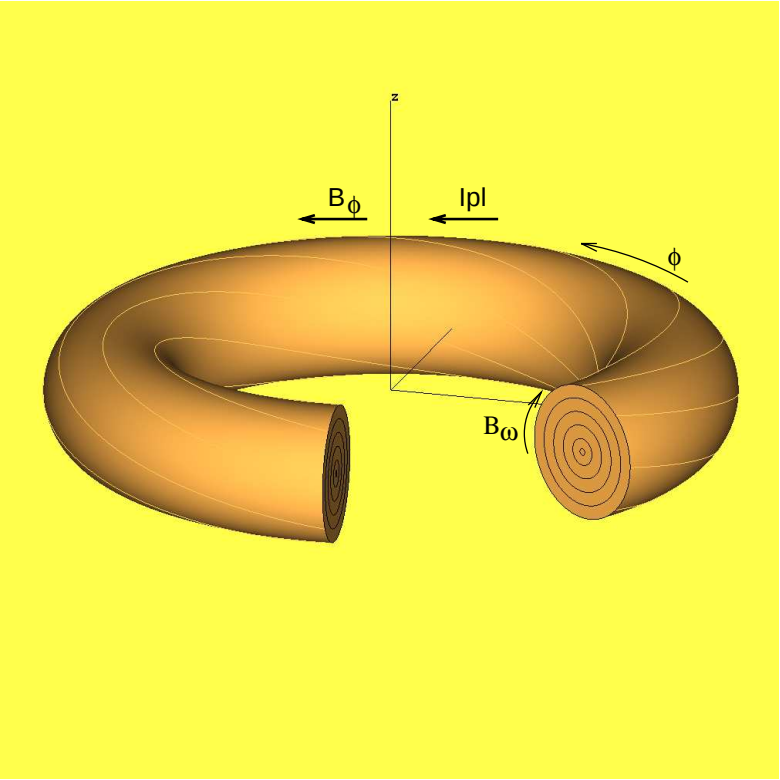

Invention of "tokamak" utilized Shafranov's stability criterion (1951)

$$q = \frac{aB_\varphi}{RB_{pl}} = 5\frac{a^2 B_\varphi}{RI_{pl}} > 1 \qquad (1.1)$$

of kink perturbations

$$\rho = a + \xi_{11}\cos(\omega - \varphi) \qquad (1.2)$$

or

$$nq > m \qquad (1.3)$$

of free boundary kink modes m $>$ 1

$$\rho = a + \xi_{mn}\cos(m\omega - n\varphi). \qquad (1.4)$$

R, a *are the major and minor radii of the plasma,*

ω, φ *are poloidal and toroidal angles,*

ξ_{mn} *is the plasma boundary perturbation.*

1.1 Classical kink mode m/n=1/1

Kink mode m=1 is driven by $\vec{I}_{pl} \times \vec{B}_{\varphi}$ which amplifies deformation

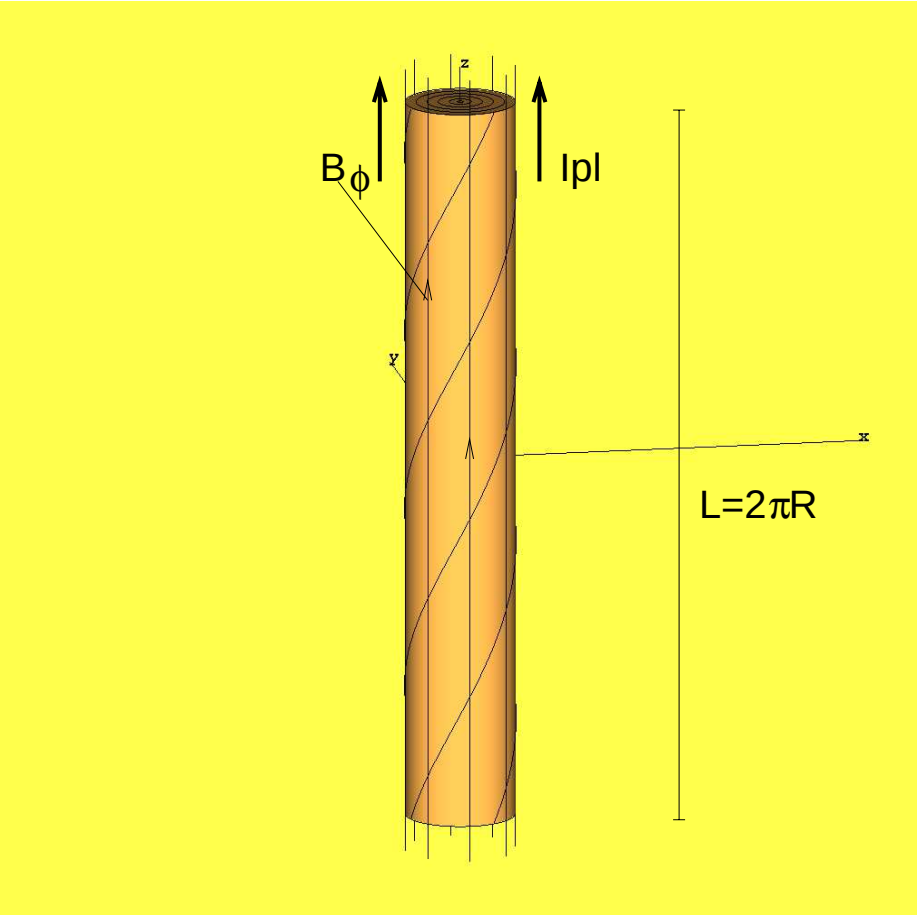

Equivalent cylindrical model of toroidal plasma

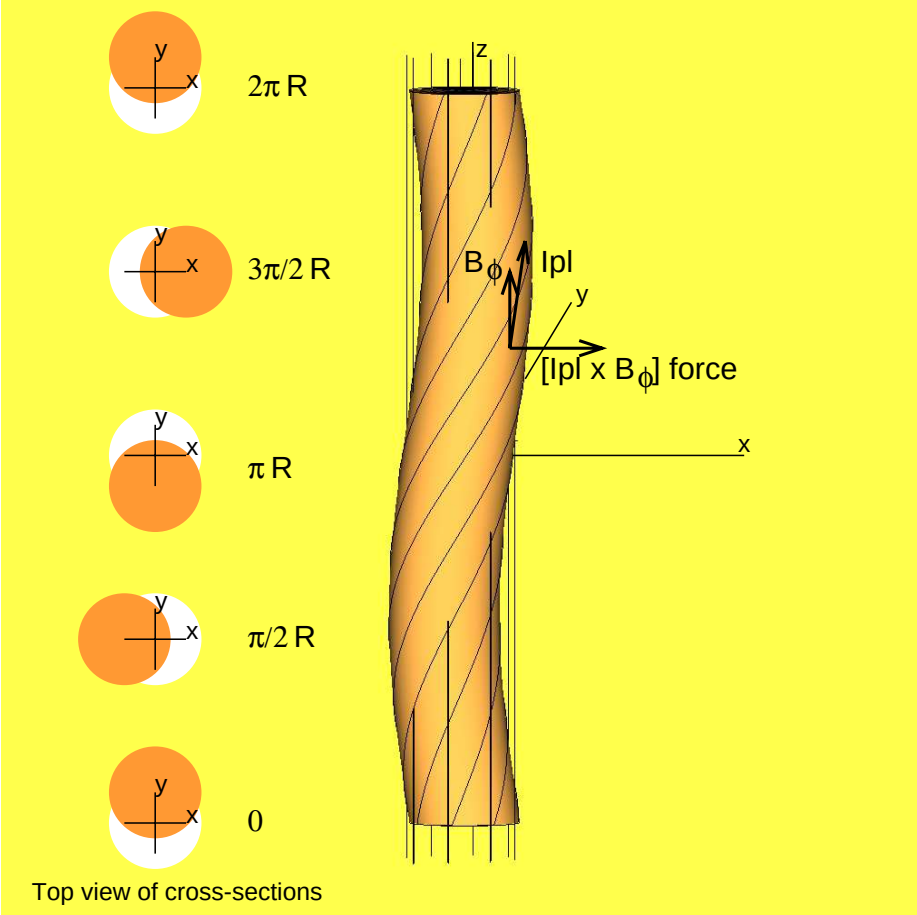

m/n=1/1 deformation of plasma

Without additional effects, kink mode m=1 would be unconditionally unstable

1.2 Surface current

Surface currents $\vec{\imath}_{11} = i_{11}\cos(\omega-\varphi)(\vec{e}_\omega + \frac{a}{R}\vec{e}_\varphi)$ are excited in order to eliminate the normal to plasma component of magnetic field.

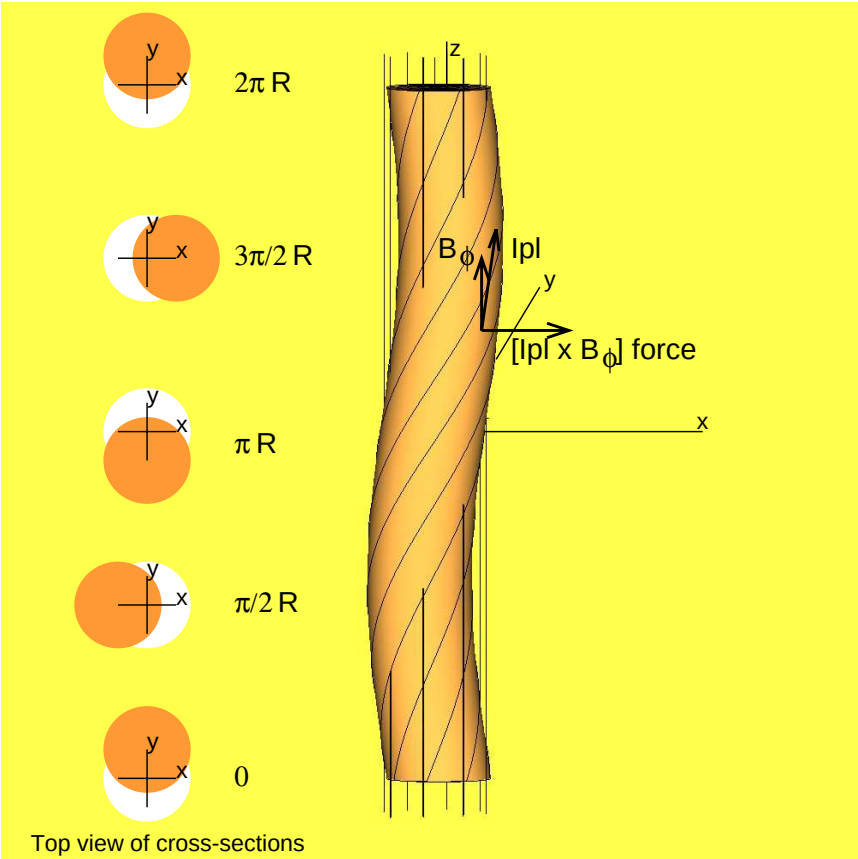

Toroidal magnetic field lines punch the plasma surface

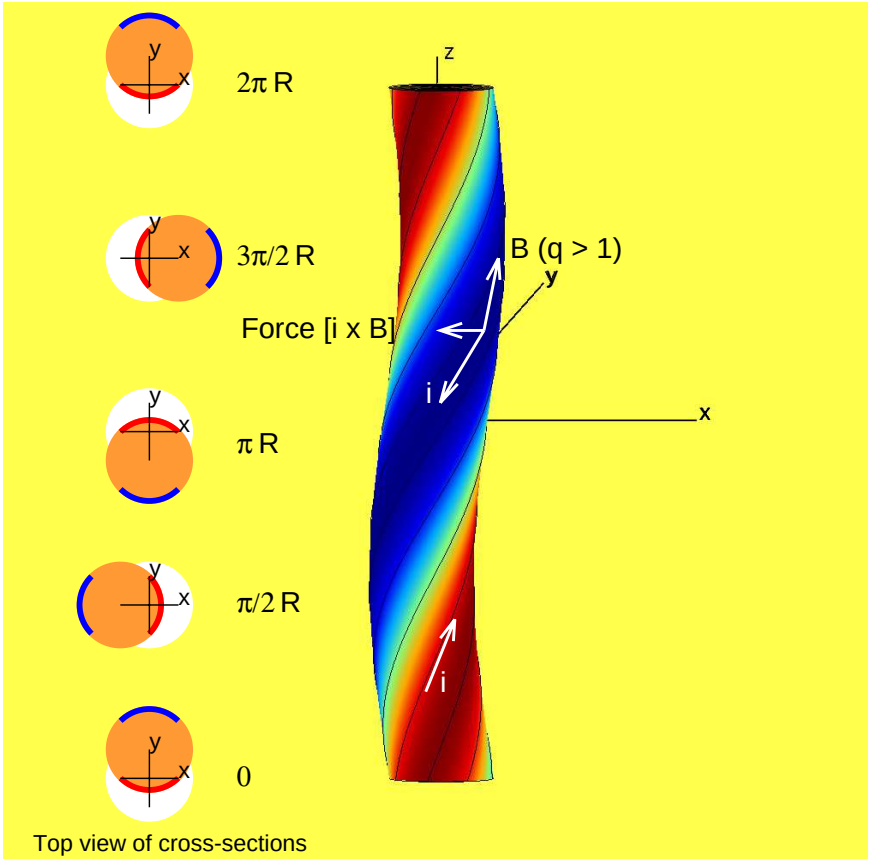

surface currents: blue ones are opposite to plasma current, reds are in the same direction

Magnetic field of the surface currents provides equilibrium in the core. Surface currents stabilize the mode at $q > 1$

The remaining force is acting only on the surface currents in the form of electro-magnetic pressure $p_{j\times B}$

$$\mu_0\vec{\imath}_{11} = -\xi_{11}\frac{2B_\varphi}{R}\cos(\omega-\varphi)\left(\vec{e}_\varphi + \frac{a}{R}\vec{e}_\omega\right),$$
$$p_{j\times B} = \vec{e}_\rho\cdot(\vec{\imath}\times(\vec{B}_{pl}+\vec{B}_\varphi)) = 2B_\varphi B_{pl}(1-q)\frac{\xi_{11}}{R}\cos(\omega-\varphi) \qquad (1.5)$$

This force changes sign at $q = 1$, forming a right boundary of instability zone of kink mode m=1

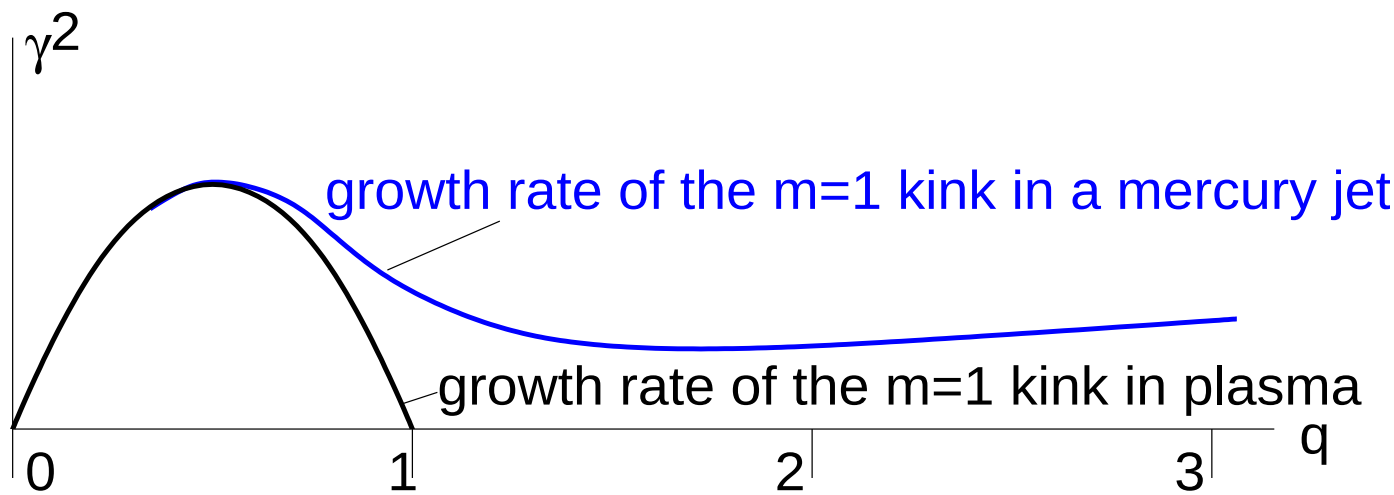

Shafranov's stability diagram for m=1 kink mode

Tokamak plasma is stable exclusively due to excitation of surface currents

1.3 Electro Motive Force for surface currents

Surface currents are driven by the plasma motion in the toroidal magnetic field B_φ

The Ohm's law in the plasma

$$-\frac{\partial \vec{A}}{\partial t} + \vec{V} \times \vec{B} - \nabla \phi_E = \frac{\vec{\jmath}}{\sigma},$$

$$-\frac{\partial \vec{A}^{i,surf}}{\partial t} \underbrace{-\frac{\partial \vec{A}^{pl,core}}{\partial t} + V B_\omega \vec{e}_\varphi}_{vanishes\ for\ m=1} - V B_\varphi \vec{e}_\omega - \nabla \phi_E^{surf} = \frac{\vec{\jmath}}{\sigma} \tag{1.6}$$

Projection of EMF on the helical path of the current

$$-V B_\varphi \vec{e}_\omega \cdot \left(\vec{e}_\varphi + \frac{a}{R} \vec{e}_\omega \right) = -V B_\varphi \frac{a}{R} \tag{1.7}$$

drives the surface current

$$\vec{\imath}_{11} = i_{11} \left(\vec{e}_\varphi + \frac{a}{R} \vec{e}_\omega \right) \tag{1.8}$$

at the plasma boundary

1.4 Kink modes m>1

For $m > 1$, tension of the plasma current magnetic field lines contributes to stability

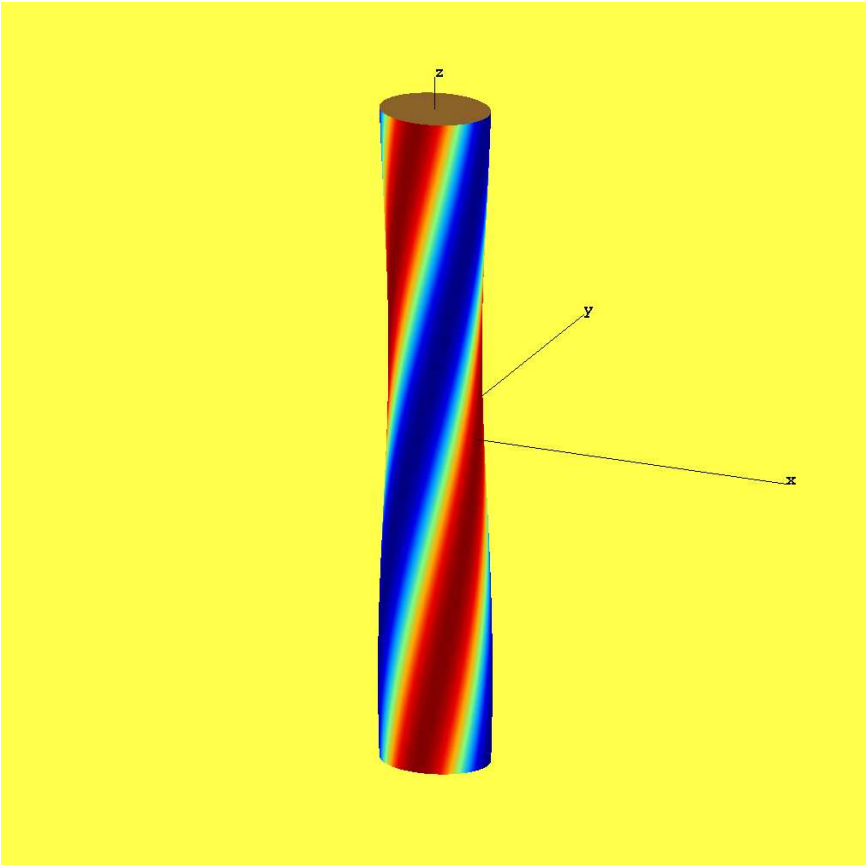

negative (blue) and positive (red) surface currents

$$\rho = a + \xi \cos(m\omega - n\varphi)) \qquad (1.9)$$

Excited surface current

$$\mu_0 \vec{\imath}_{mn} = \xi_{mn} \frac{2B_{pl}}{a}(nq_{m,L} - nq) \cdot \cos(m\omega - n\varphi)\left(\vec{e}_\varphi + \frac{na}{mR}\vec{e}_\omega\right). \qquad (1.10)$$

At the left boundary of instability, $nq = nq_{m,L}$, the surface current

$$\vec{\imath}_{mn} = 0 \qquad (1.11)$$

At the resonant value $nq = m$, the force acting on surface current

$$\vec{\imath}_{nm} \parallel \mathrm{B}, \quad p_{j\times\vec{B}} = 0, \qquad (1.12)$$

leading to stability criterion, either

$$nq < nq_{m,L}, \quad \text{or} \quad nq > m. \qquad (1.13)$$

L.E.Zakharov. Sov. J. Plasma Physics, v.7, 8 (1981).

Surface current i_{mn} is driven by the same EMF $VB_\varphi na/(mR)$

1.5 Shafranov's stability diagram

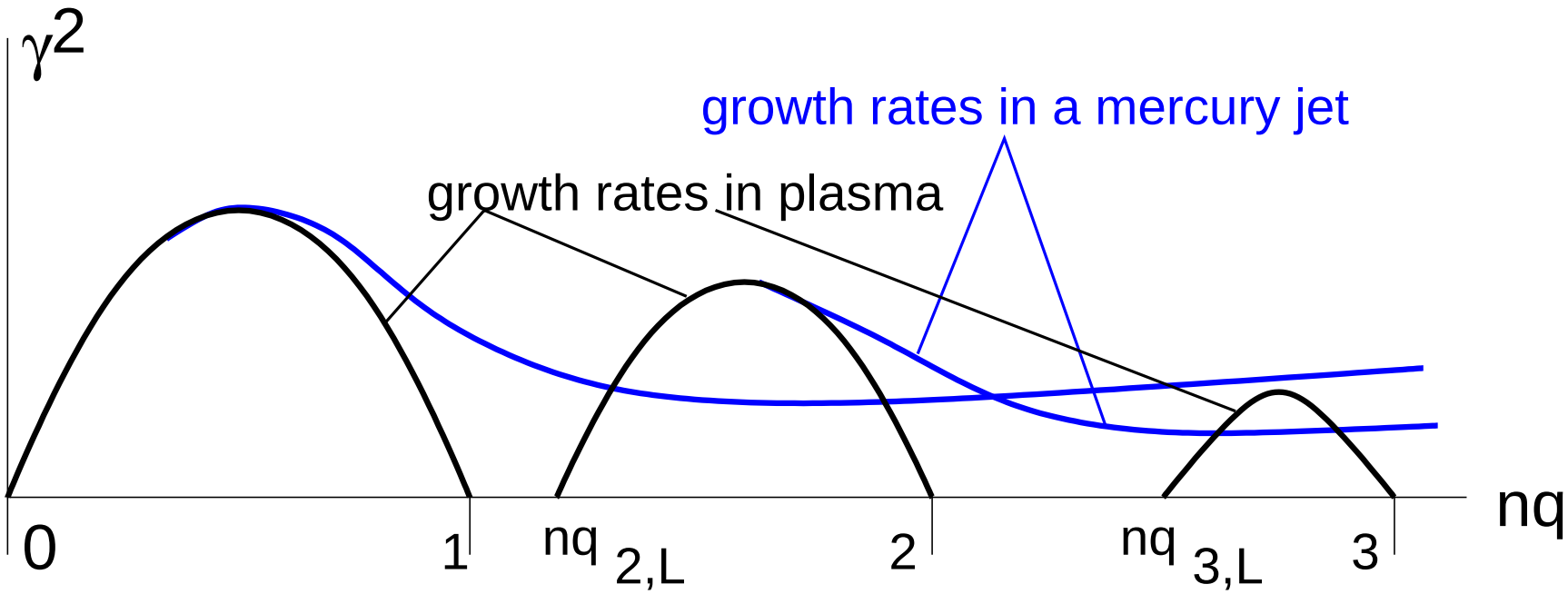

Stability diagram of free boundary kink modes. (Shafranov V.D., Zh. Tech. Fiz. v. 40, 240 (1970) [Sov. Phys. Tech. Phys. v.15, 175 (1970)])

Left instability boundary of each kink mode is determined by condition

$$\vec{\imath}_{mn} = 0. \tag{1.14}$$

At the right instability boundary $nq = m$

$$\vec{\imath}_{mn} \parallel \vec{B}, \quad (\vec{\imath}_{mn} \times \vec{B}) = 0. \tag{1.15}$$

Necessary stability criterion

Plasma is unstable if

$$nq_{m,L} < nq(a) < m, \qquad (\text{for m=2:} \quad q_{2,L} < q < 2), \quad (1.16)$$

where $nq_{m,L}$ depends on current distribution and should be calculated numerically.

The necessary stability criterion, relavant do disruptions, was derived in 1980.

Plasma is unstable if (L.E.Zakharov. Sov. J. Plasma Physics, v.7, 8 (1981)

$$m - 1 < nq_{min} \quad \textbf{and} \quad nq(a) < m. \qquad (1.17)$$

The m/n=2/1 mode is unstable if

$$1 < q_{min} \quad \textbf{and} \quad q(a) < 2. \qquad (1.18)$$

Because in tokamaks always $q_{min} \geq 0.95 \simeq 1$, the kink mode m/n=2/1 is unstable as soon as

$$q(a) < 2. \qquad (1.19)$$

1.6 Effect of conducting shell

Plasma perturbations generates magnetic field perturbations at the conducting shell

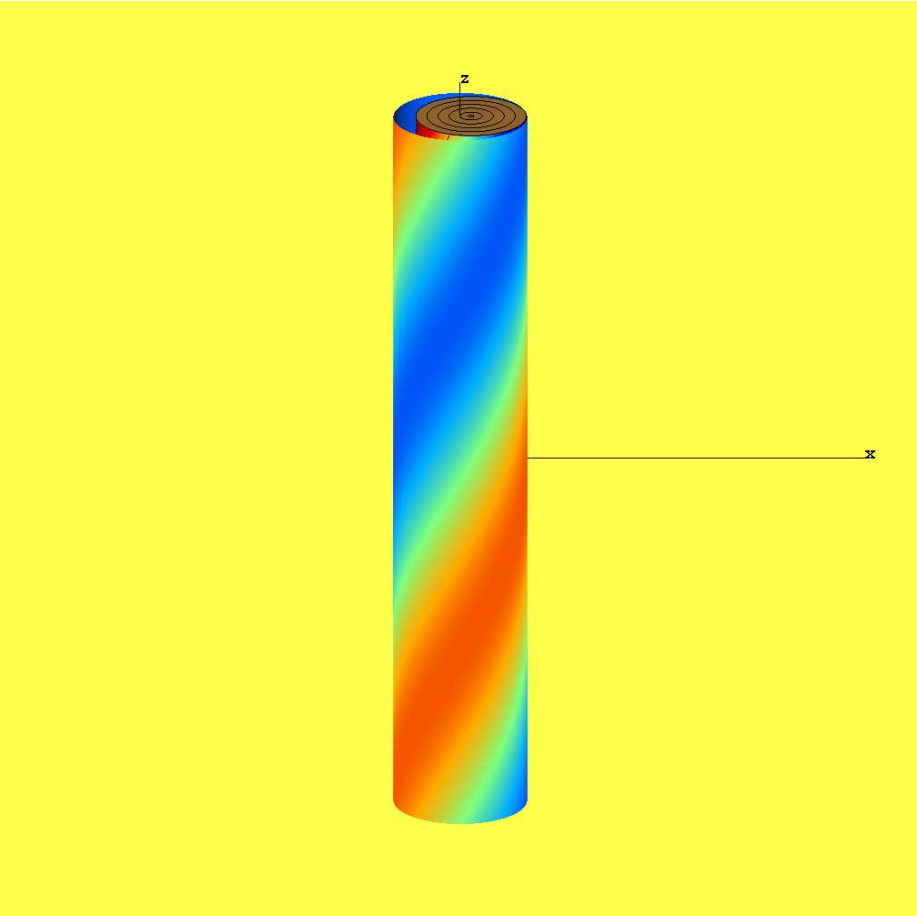

For the kink modes, magnetic field perturbation is determined by normal component of the field

$$\tilde{B}_n = \vec{B} \cdot \nabla \xi \simeq \frac{B_\omega}{a}(m - nq)\xi. \qquad (1.20)$$

Due to magnetic field perturbation, eddy (mirror) currents in the conducting shell

$$\bar{\imath}^{eddy}_{m,n} = -\frac{2}{1-\lambda^m}\frac{a^{m+1}}{b^{m+1}}B_{pl}\cdot (m - nq)\frac{\xi_{m,n}}{a}, \qquad (1.21)$$

$$\lambda \equiv \frac{a^2}{b^2}$$

are excited.

At $nq = m$ eddy currents are absent and do not affect the kink mode.

Shafranov's stability diagram with a wall

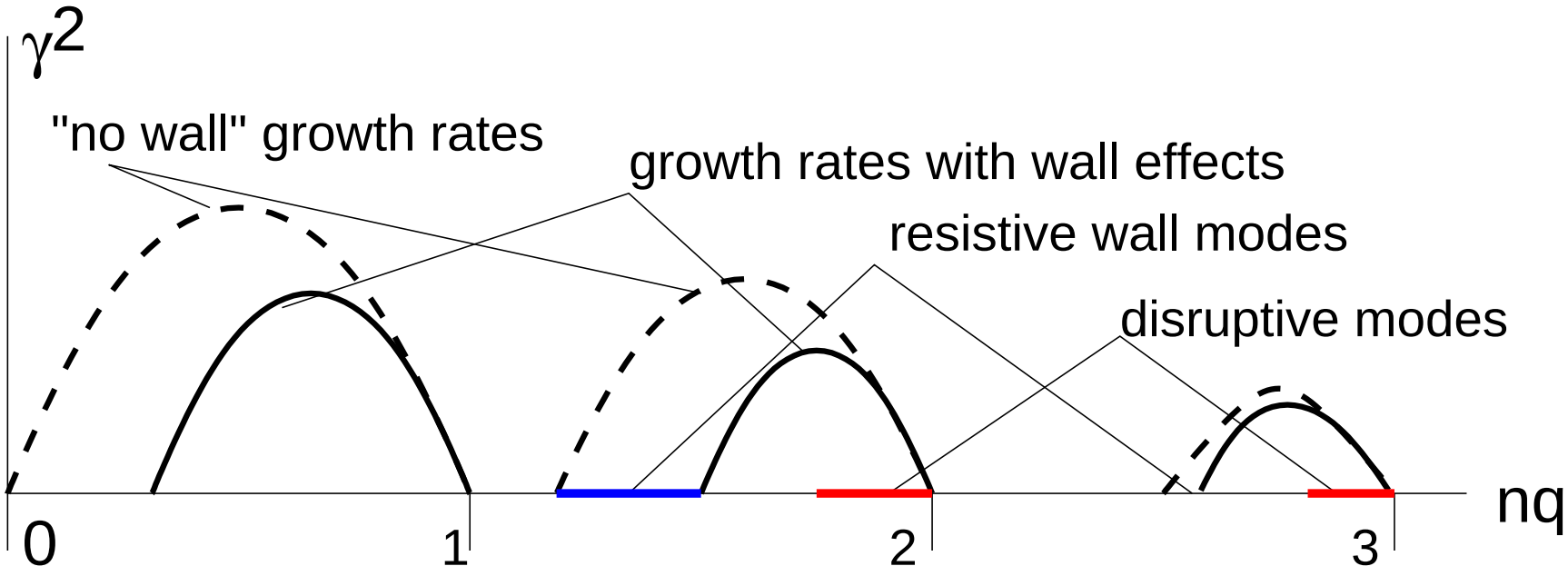

Blue values of nq corresponds to "resistive" mode instabilities, where wall eddy currents play significant role.

Red intervals near the right instability boundary $nq = m$ correspond to disruptions, where wall plays no role.

2 Physical and "equivalent" walls

Gaps in the wall change the path of eddy currents and reduce stabilizing effect of the wall

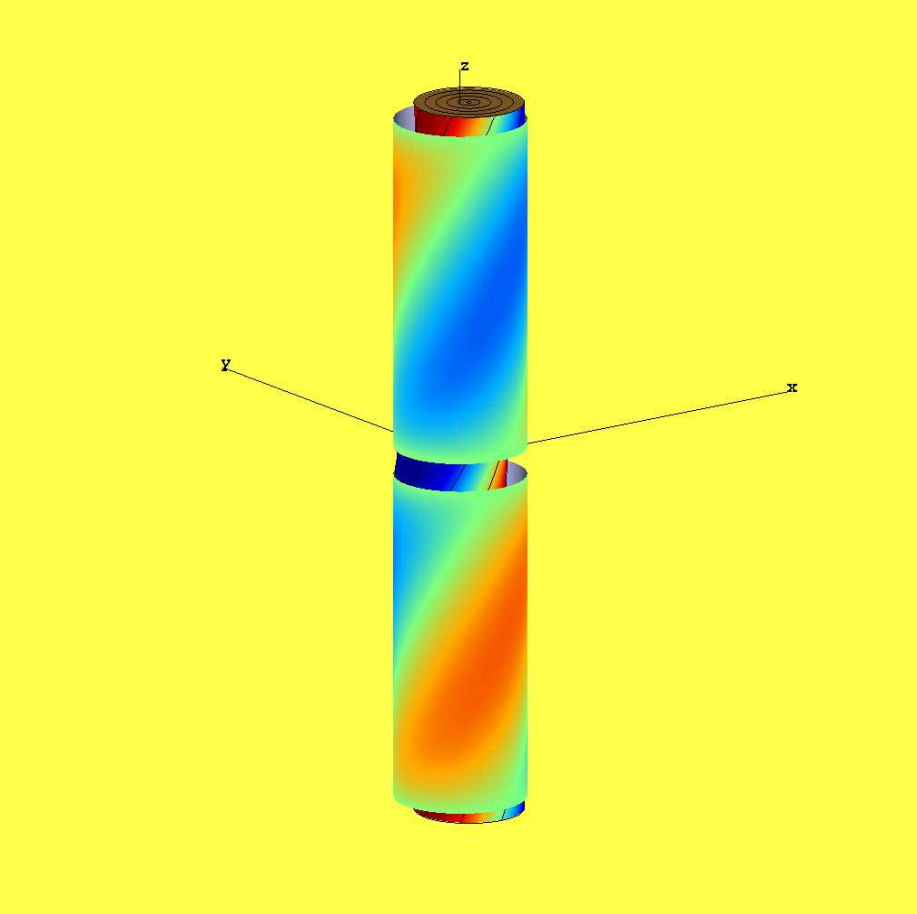

Due to gaps, the radius b_{equiv} *of electromagnetically equivalent shell is larger than the radius* b *of the physical shell*

$$b_{equiv} = b + \delta b,$$

$$\frac{\delta b}{b} \simeq \frac{N}{m^2}\frac{b}{2R} \cdot \frac{1}{\ln \frac{4\pi R}{Nh}}, \qquad (2.1)$$

N *is the number of gaps.*

The dependence of δb *on the gap width is only logarithmic (M. A. Leontovich,1952).*

Even small gaps significantly affect stability.

Limiters, ports, ribs, all make equivalent shell more distant from the plasma than the physical position of conducting structures.

Toward simulating the ITER wall

The ITER vacuum vessel is full of ports

The theory is on the way to implementing its model into numerical calculations: equations, routines for calculations of inductance matrix L_{ij} *for triangle based wall model have been tested on simplified problems (Cbtri code). The ITER representation of the VV was given by E. Lamzin group (Efremov Institute).*

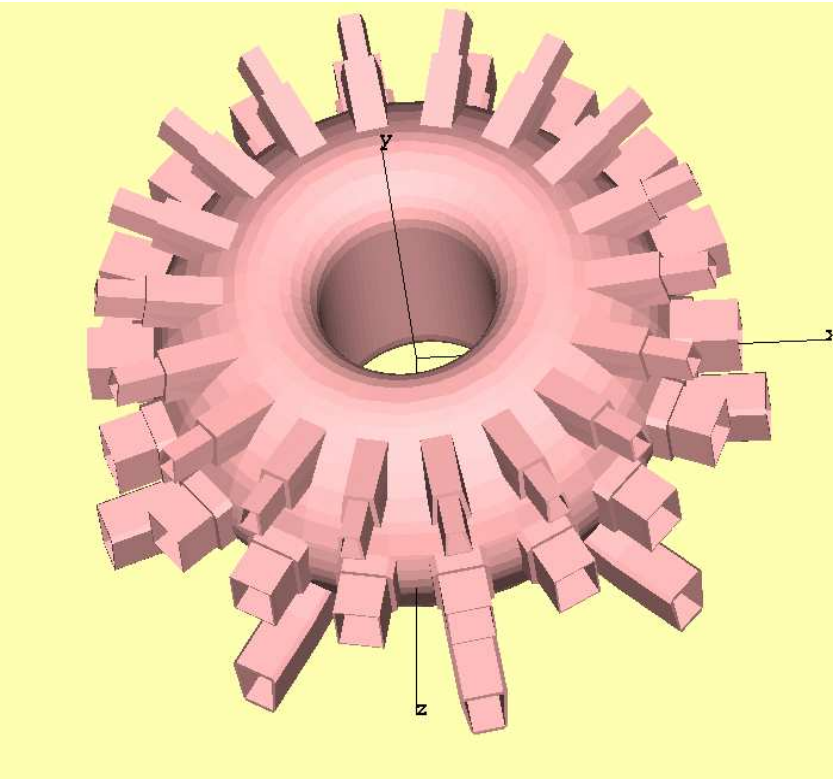

I think we are on a right track for understanding, at least, one type of disruptions.

Calibration of LTX double shell

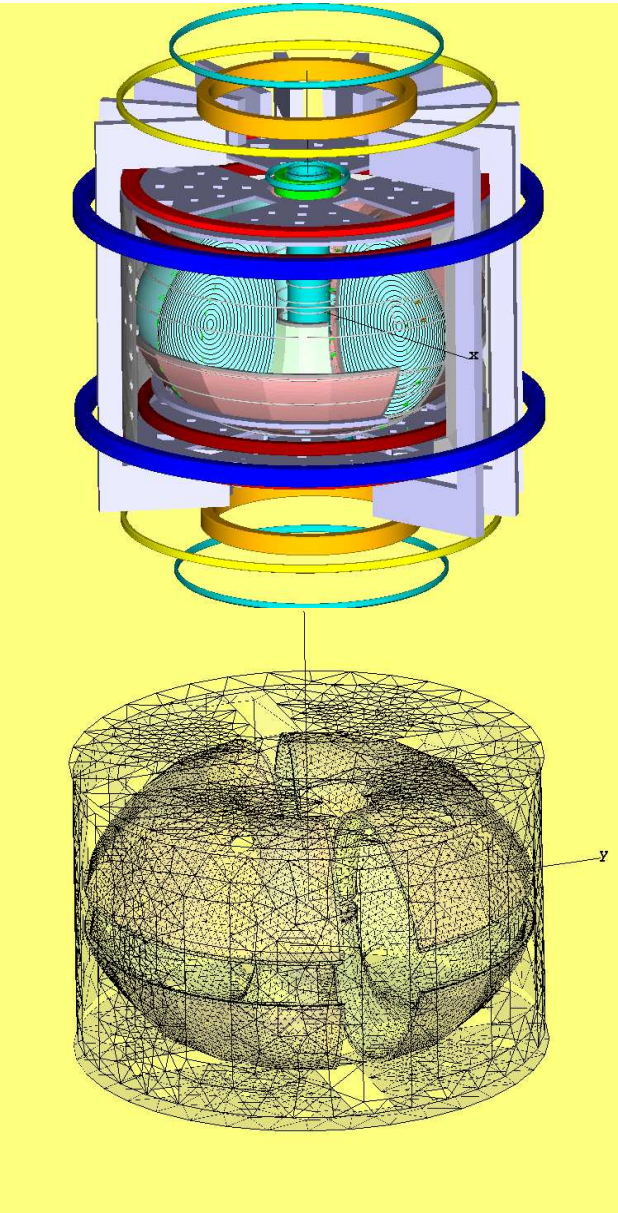

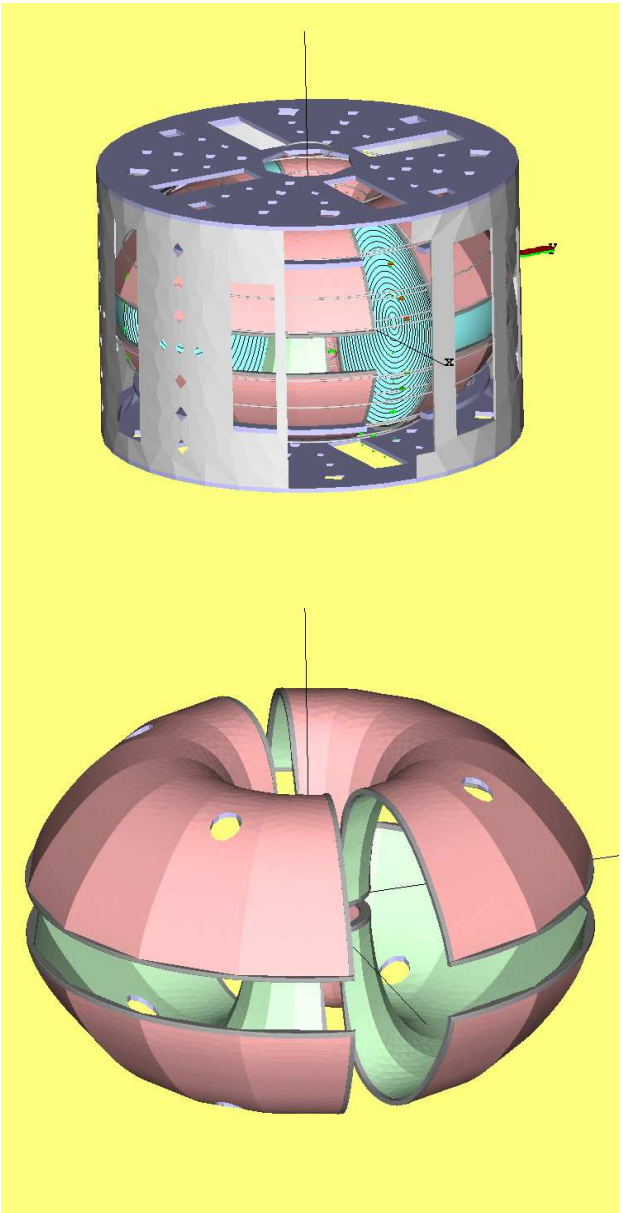

Is crucial for developing a numerical model of ITER disruptions

Double shell plasma environment make numerical model of passive structure absolutely necessary for interpretation of magnetic signals.

LTX gives an excellent opportunity for tuning up the electromagnetic shell model.

Entering disruption

Resonant free boundary kink mode initiates the disruption. Wall plays no role.

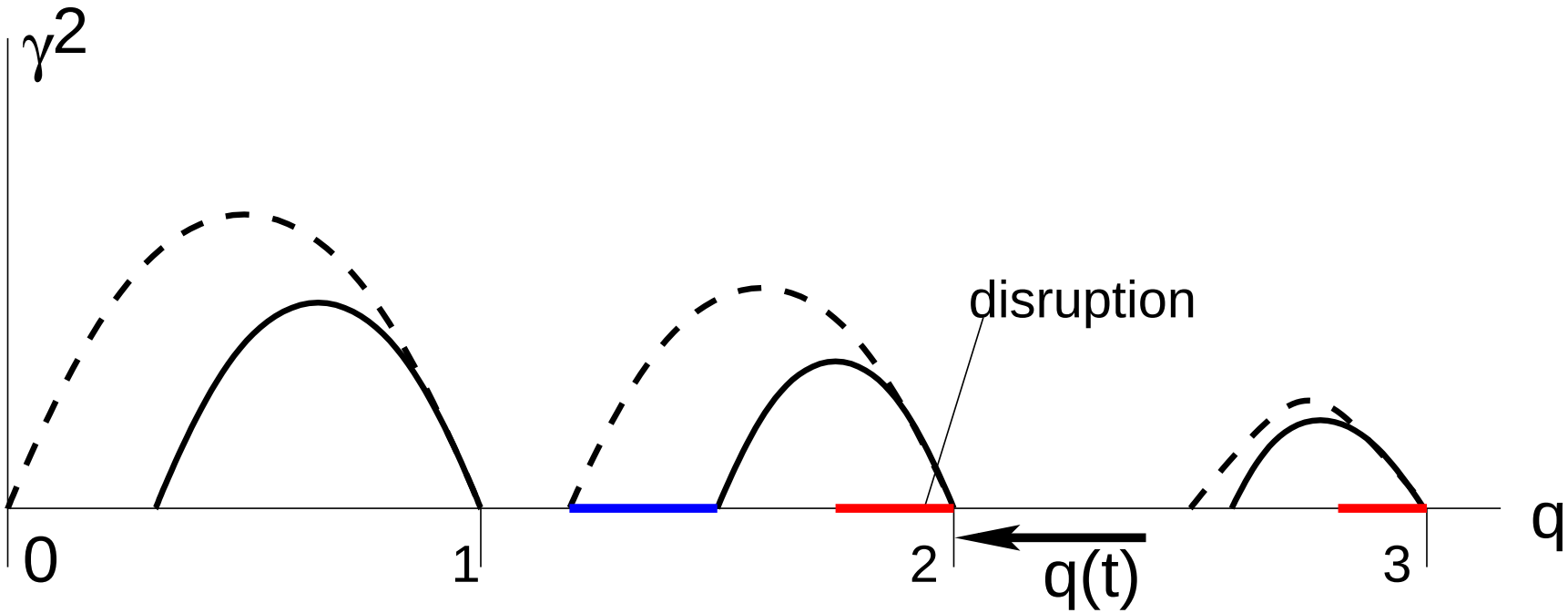

When $q(a,t)$ is going down toward $q = m$, the kink mode excited with no effect of the shell. The kink mode grows at a fast, MHD, time scale, leading to disruption.

Initially, the mode does not produce perturbations of $\tilde{\vec{B}}$ and is "invisible" on magnetics.

During disruptions, plasma makes an electric contact with the physical wall.

The electro-magnetically equivalent wall does not affect disruptions.

3 Hiro currents

During disruption plasma touches the wall, and surface current $i(\omega, \varphi)$ may be shared between wall and the plasma.

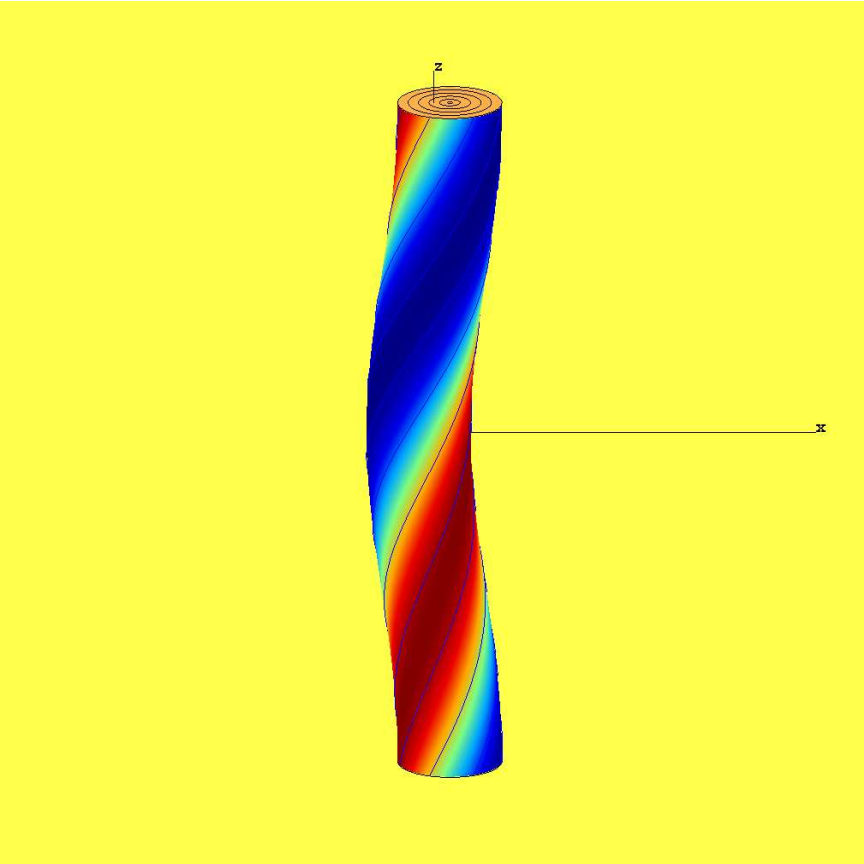

At the plasma side, which is close to the wall, the surface current $i(\omega, \varphi)$ is always negative.

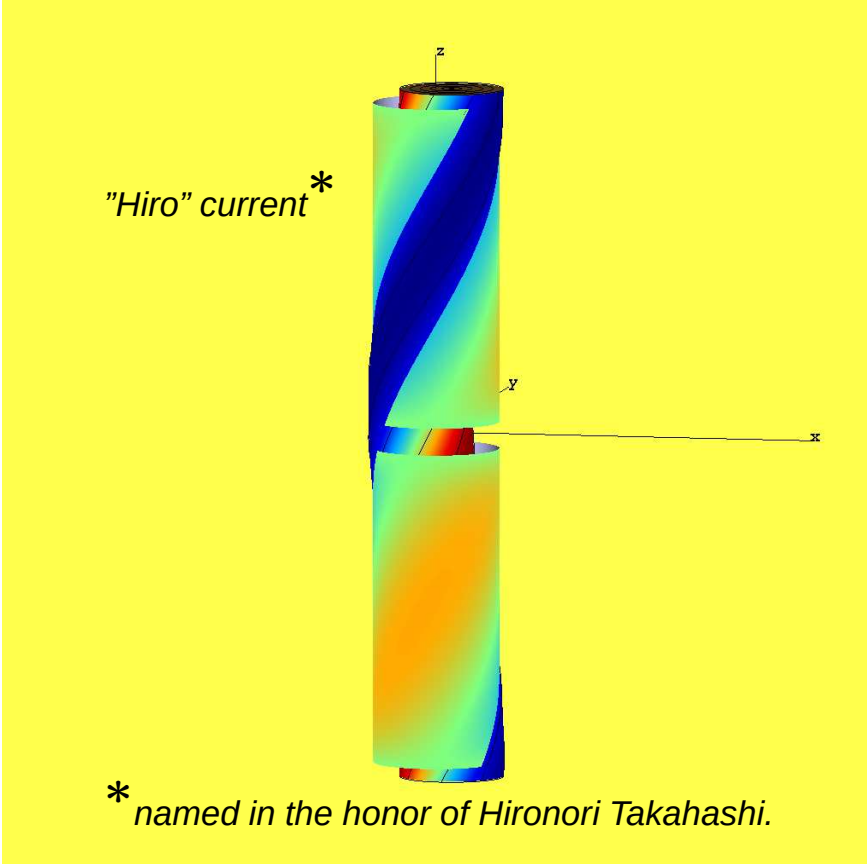

Only negative part of $i(\omega, \varphi)$ can be shared between plasma and the wall. These are the "Hiro" currents.

Hiro currents are the surface currents generated by the plasma motion and shared between plasma and the wall

Hiro currents and m/n=2/1 mode

Hiro currents are the key players in disruptions with m $\geq$ 2 as well

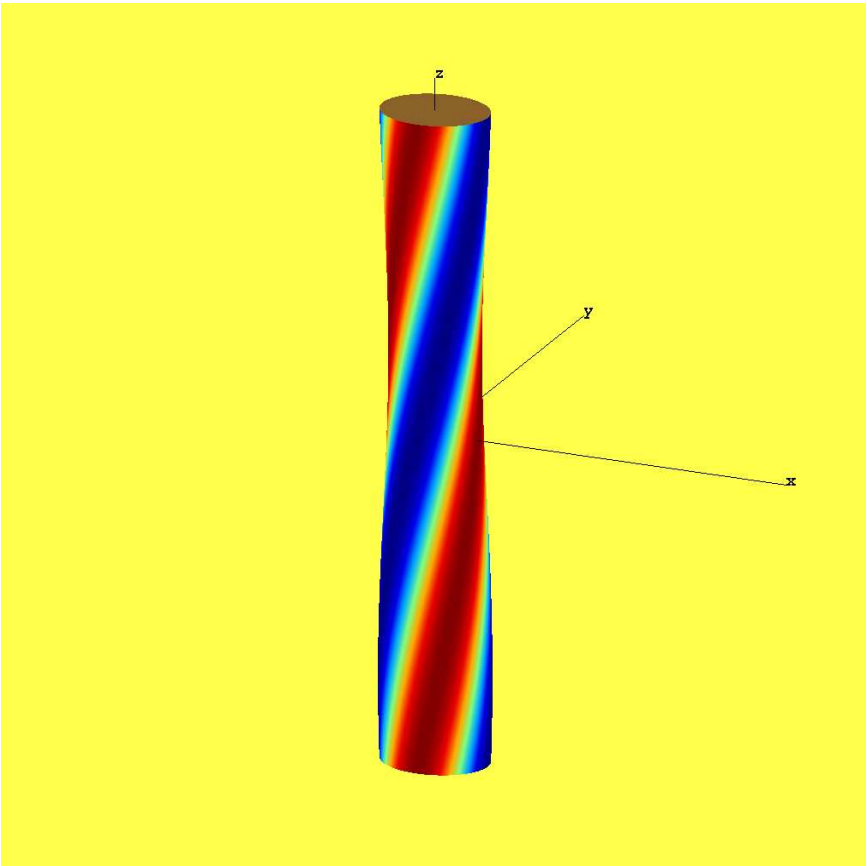

Perturbation of m/n=2/1 mode

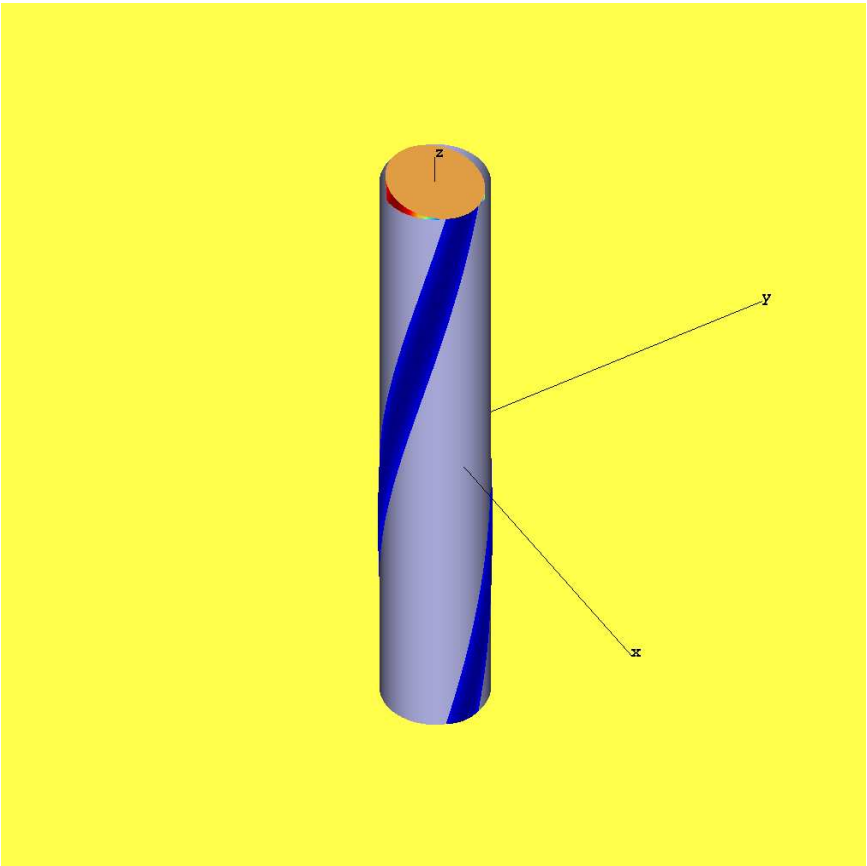

Hiro currents in the liner for m/n=2/1 mode

Independent of the m-number, only negative Hiro currents can go to the wall

Eddy and Hiro currents in the wall

Eddy currents are sensitive to gaps in the wall. Hiro currents are not.

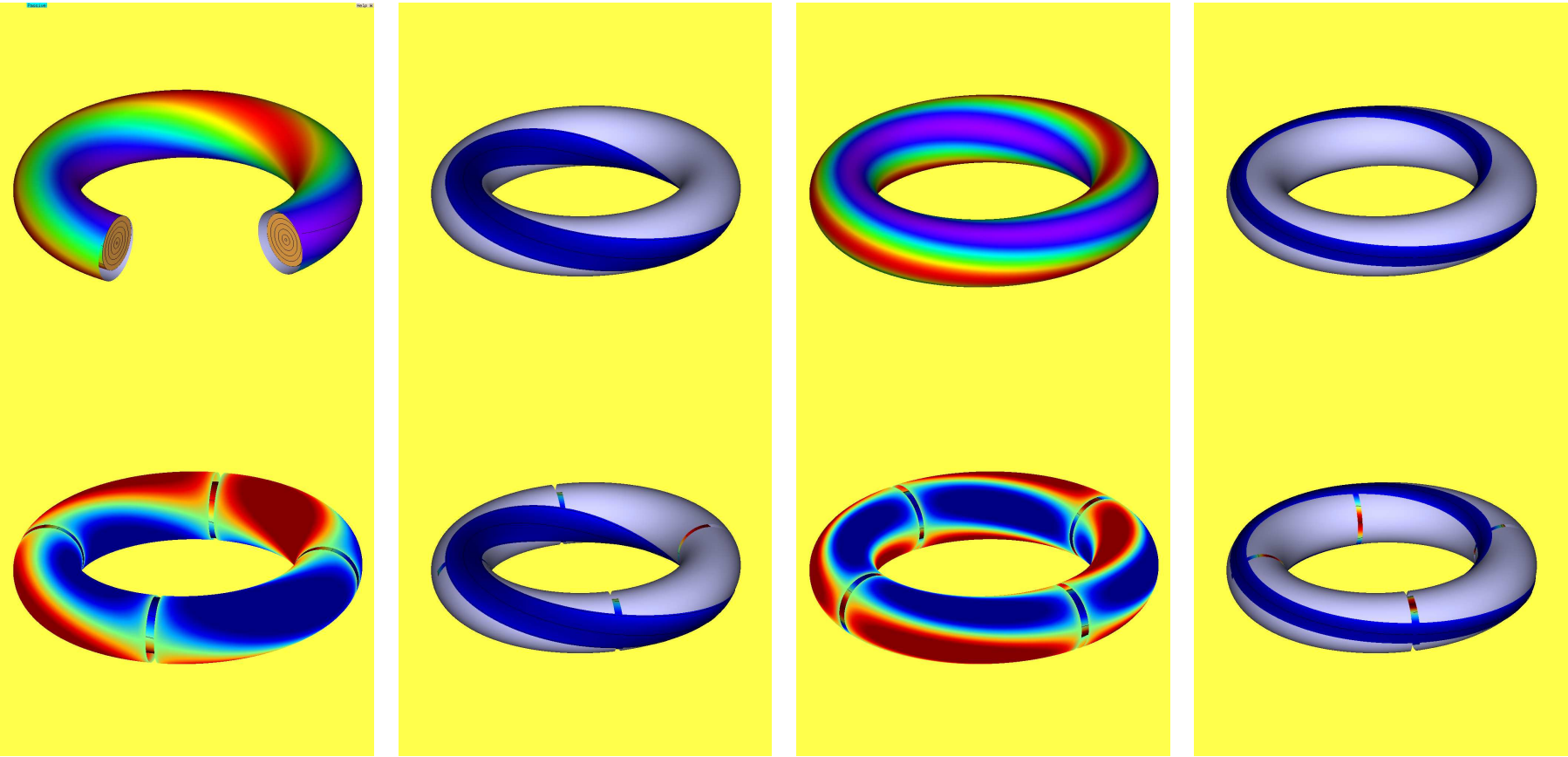

Eddy currents m=1 *Hiro currents m=1* *Eddy currents m=2* *Hiro currents m=2*

Hiro currents are a fundamental phenomenon in disruptions.

3.1 Forces and toroidal asymmetry

Kink mode m/n=1/1 can exist only during fast VDEs

$$F_x^{th} = \pi B_\varphi I_{pl} \frac{1-\frac{\lambda}{q}}{1-\lambda}(1-q)\xi_{11}, \quad \frac{1}{2}\Delta M_{IZ} = \frac{1-q}{1-\lambda} I_{pl}\xi_{11} \qquad (3.1)$$

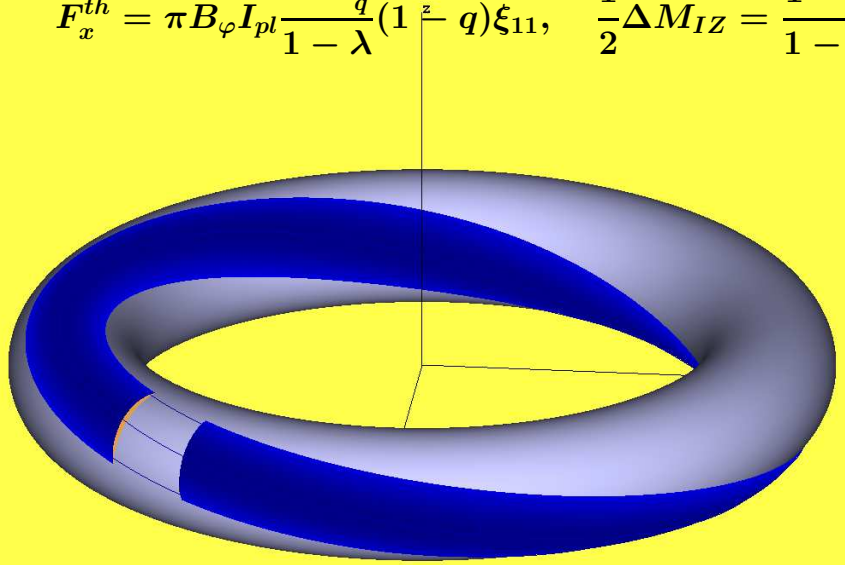

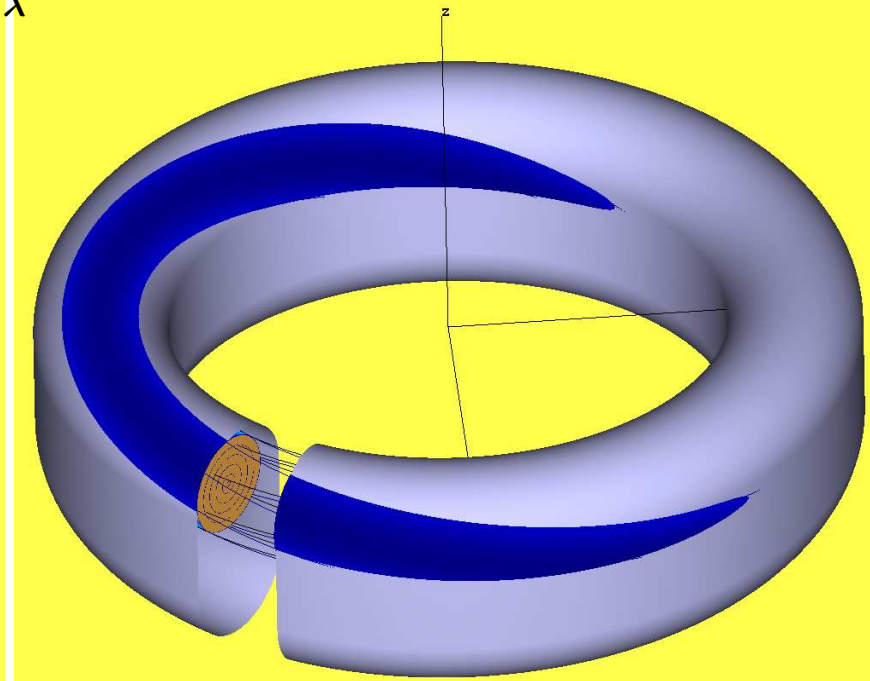

Internal Mirnov coils miss the Hiro currents, resulting in the positive current spike.
Outside the wall, a high negative loop voltage spike is generated.
Hiro currents of the kink mode m/n=1/1 create very dangerous sideways force to the vessel.

When the wall is not conformal to the plasma (typical case), the plasma current measurements with internal Mirnov coils will be different in different toroidal cross-sections.

Toroidal peaking factor is a side effect of kink mode

3.2 Hiro currents are not halo currents

Halo currents are the shadow part of the plasma current. Hiro currents are excited by the plasma motion.

V. Riccardo, P. Noll, and S. P. Walker, Nucl. Fusion 40, 1805 2000 .

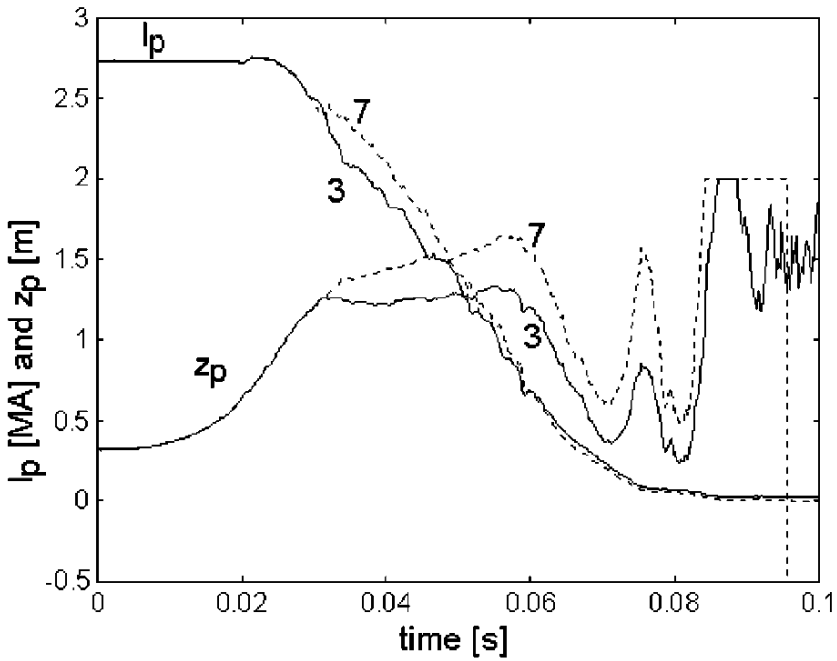

Figure 1. Plasma current and vertical position, in the opposite octants 3 and 7, during the pulse AVDE-38070, with $t_0 = 60$ s (a deliberately provoked VDE).

Measurements of toroidal asymmetry of plasma current on JET clearly indicate that the asymmetry is due currents flowing

in OPPOSITE direction to I_{pl}

and

CANNOT be related to halo currents

The direction of Hiro currents is consistent with the measurements on JET.

Hiro currents resolve the conflict between widespread "naive" thinking and the real sign of asymmetry.

Hiro currents in JET VDEs

Phase diagram of asymmetry in the plasma current measurements on JET vs asymmetry in the vertical current moment proves existence of Hiro currents

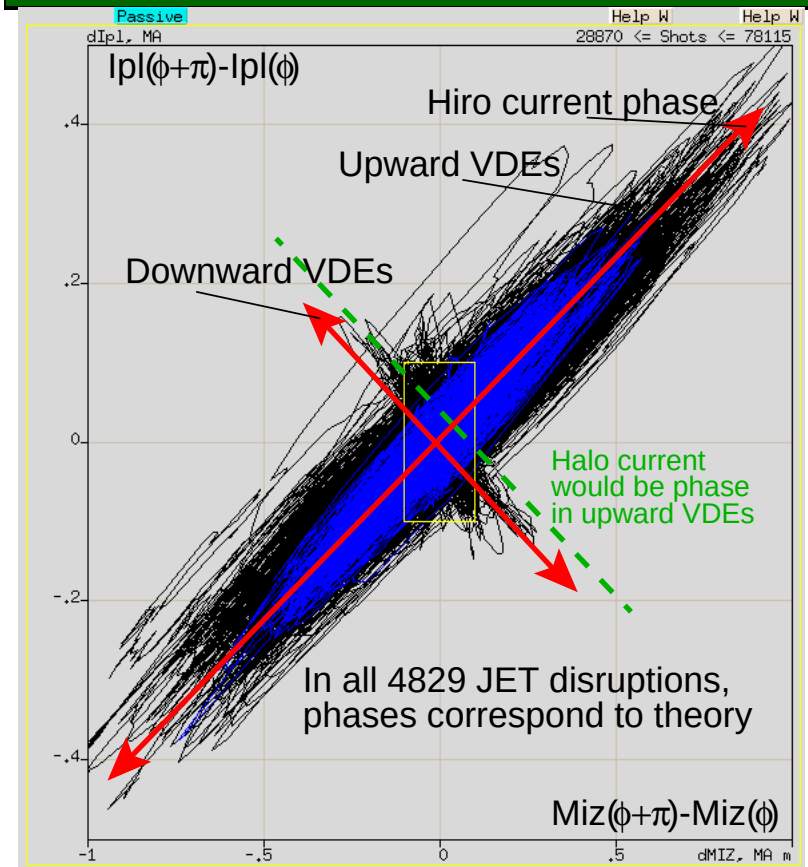

Black: $I_{pl,7}(t) - I_{pl,3}(t)$ *vs* $M_{IZ,7}(t) - I_{IZ,3}(t)$
Blue: $I_{pl,5}(t) - I_{pl,1}(t)$ *vs* $M_{IZ,5}(t) - I_{IZ,1}(t)$
(All 4829 disruption shots, 814 upward+20 downward VDEs)

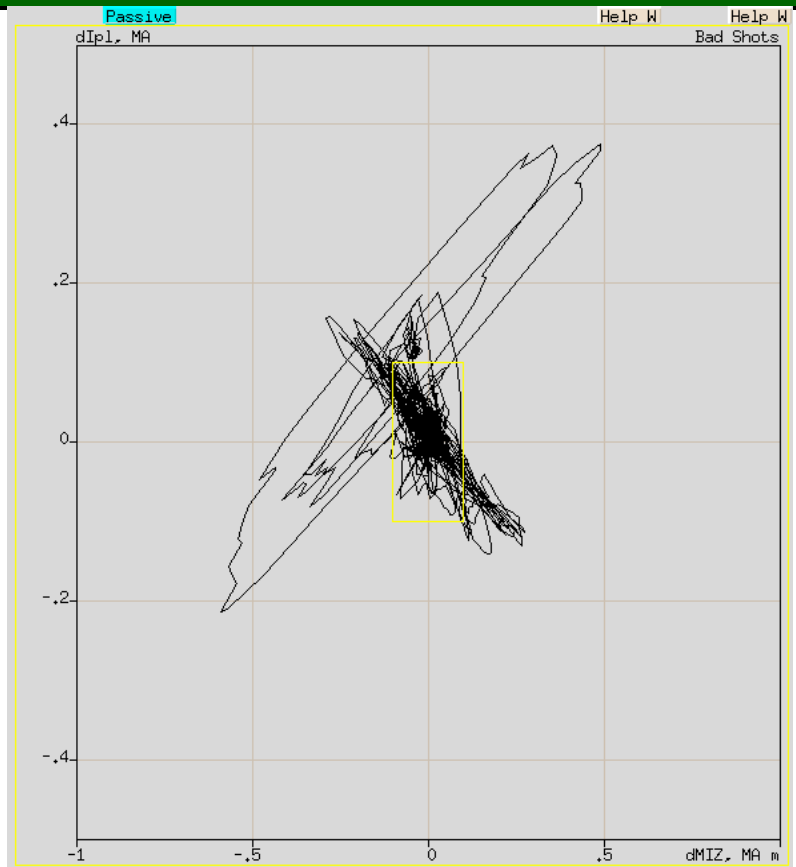

Black: $I_{pl,7}(t) - I_{pl,3}(t)$ *vs* $M_{IZ,7}(t) - I_{IZ,3}(t)$
(20 downward disruption shots)

With no single exception JET disruption data are consistent with theory of Hiro currents

3.3 Current spikes in disruptions

Independent of the wall geometry and m-number, only positive current spikes are possible in tokamak disruptions

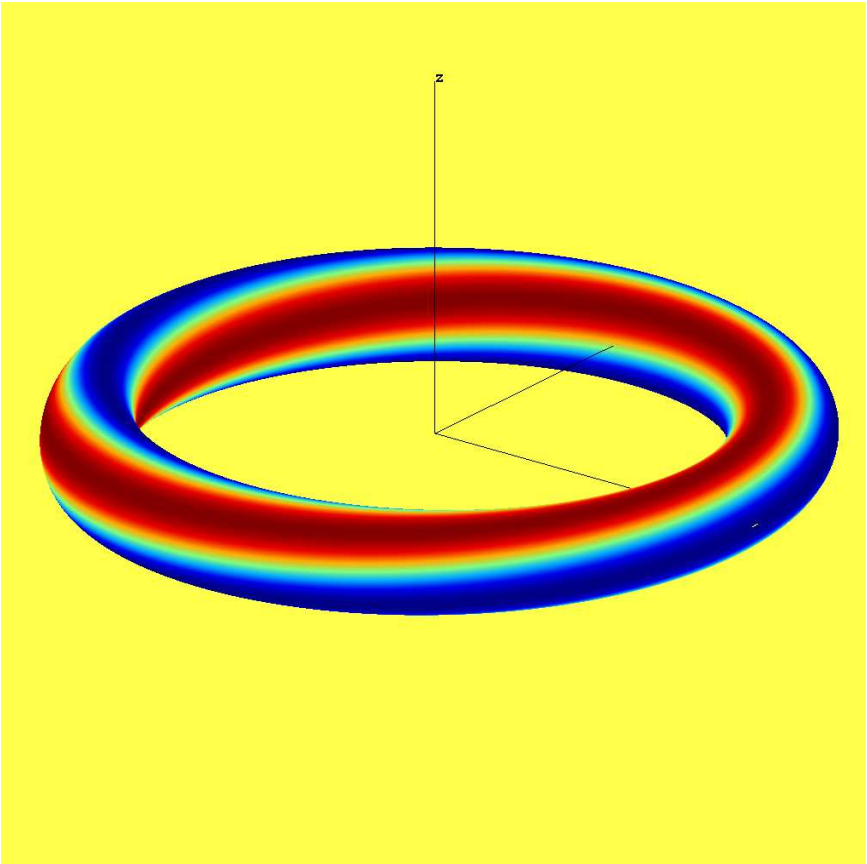

Perturbation of m/n=2/1 mode in toroidal plasma

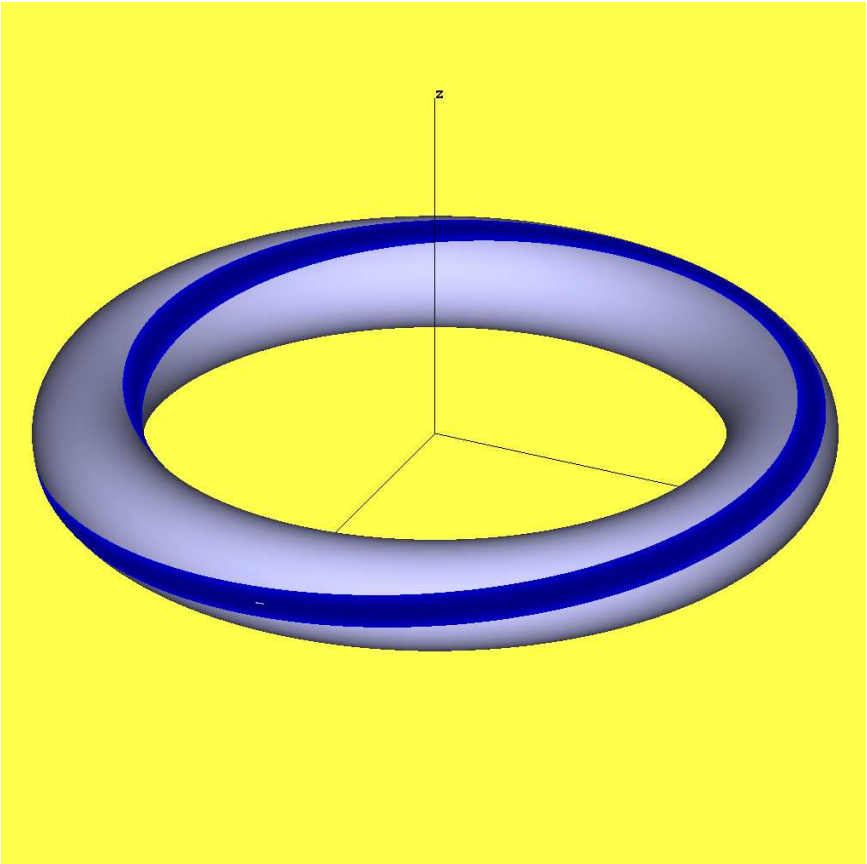

Hiro currents in the liner for m/n=2/1 mode

Hiro currents are not sensitive to gaps, limiters, ports. They are intrinsically linked to the plasma perturbation. They resolve the 46 years old puzzle on current spike in disruptions.

3.4 Hiro currents in vertical instability

Vertical instability m/n=1/0 excites similar surface currents at the plasma edge

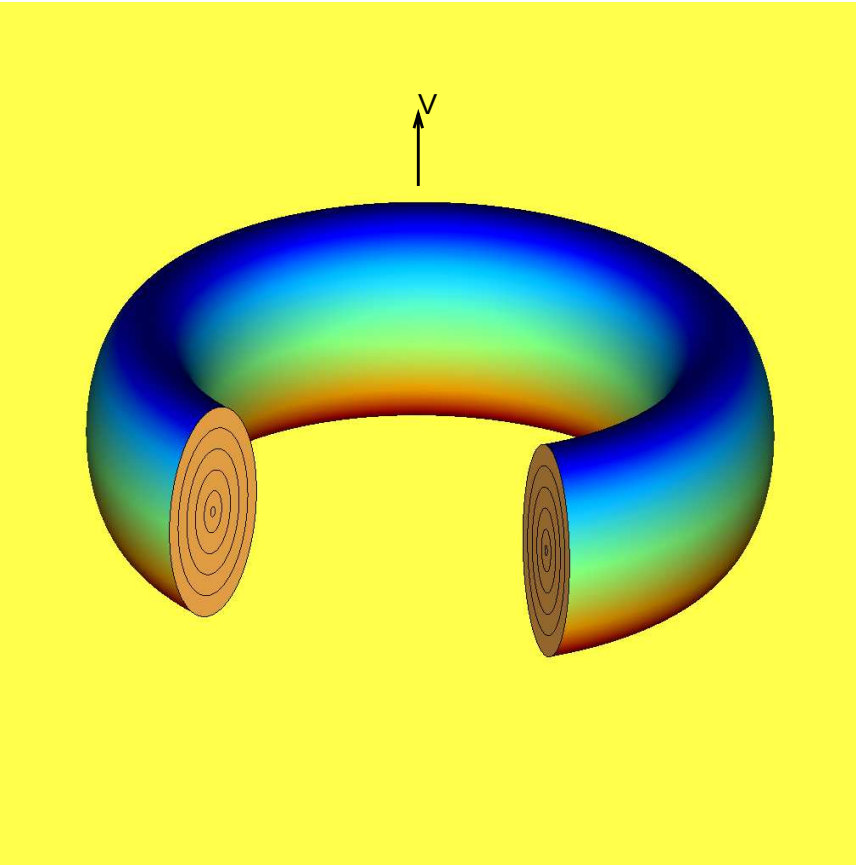

Surface currents are excited by EMF

$$E_\varphi = \mathrm{e}_\varphi \cdot (\vec{V} \times \vec{B}^{ext}_{quadrupole}) \quad (3.2)$$

They are always opposite to the plasma current at the leading side of plasma.

At the opposite side, the surface current is positive.

When touching the wall, the negative surface current may go into the wall as Hiro currents.

As a result, in the beginning of VDE internal measurements can detect the positive current spike.

The theory now predicts the possibility (probably observed, but explained erroneously) of positive current spikes due to VDEs themselves

4 Sequence of events in disruptions

The time sequence of events is now much more clear

Crossing $nq = m \rightarrow$ hidden external kink $\rightarrow$ touching the wall and exciting the Hiro currents (current spike) $\rightarrow$ current quench.

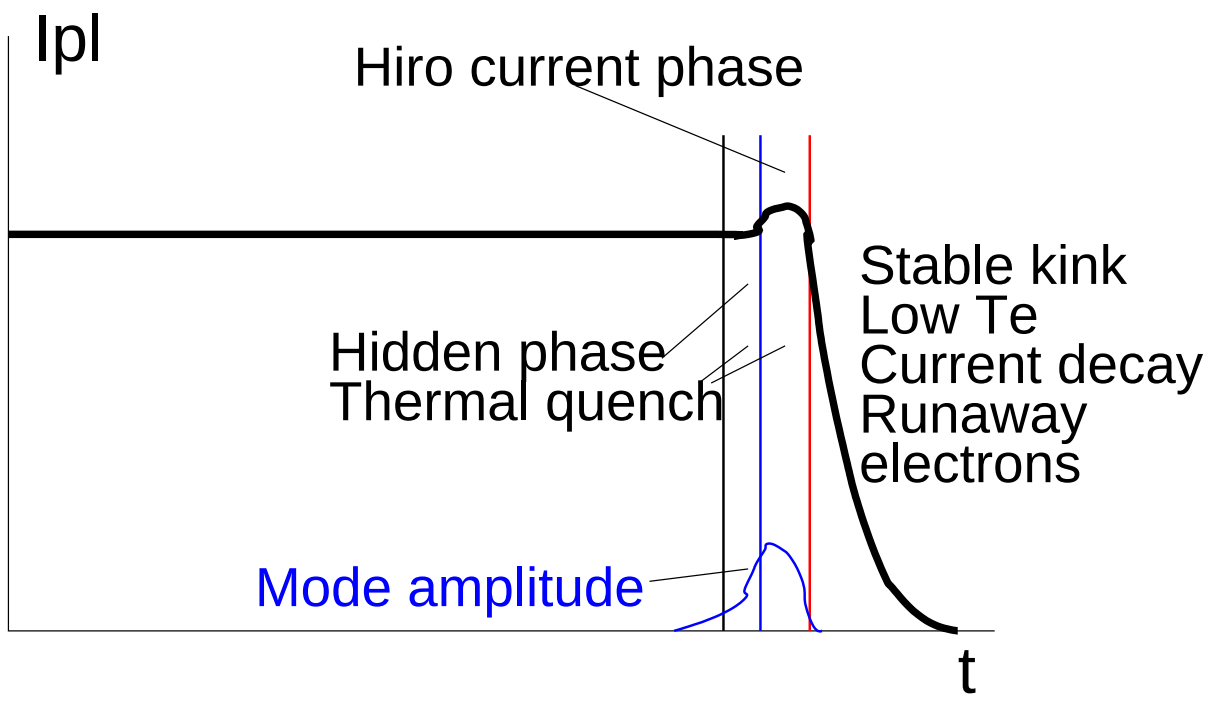

Every phase has now its first principles interpretation by theory

5 Measuring Hiro currents

First measurements of Hiro currents can confirm the understanding of disruptions, what is important for ITER and other machines.

$$\mu_0 i^{wall}(\omega_i) = B_\tau^{ext}(\omega_i) - B_\tau^{int}(\omega_i) \qquad (5.1)$$

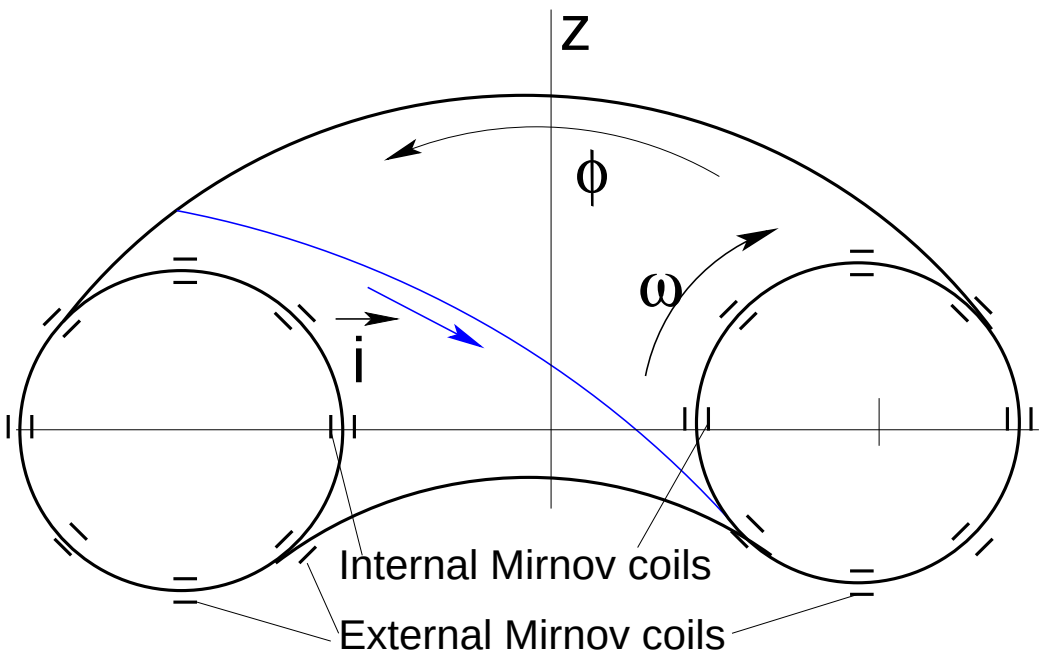

Complementary sets of internal and external Mirnov coils can give the angular distribution of the Hiro currents.

Tokamaks with circular plasma cross-section, e.g., J-TEXT (Wuhan, China) are perfect for these measurements.

Angular distribution of $i^{wall}(\omega, \varphi)$ can clarify the real reason of the current spike, i.e., either Hiro currents or some internal reconnection (Wesson, Ward, Rosenbluth, NF 1990), as it is adopted at present.

Hiro currents and NSTX

On NSTX, during both conventional and vertical disruptions Hiro current can go along the stabilizing plates from plate to plate.

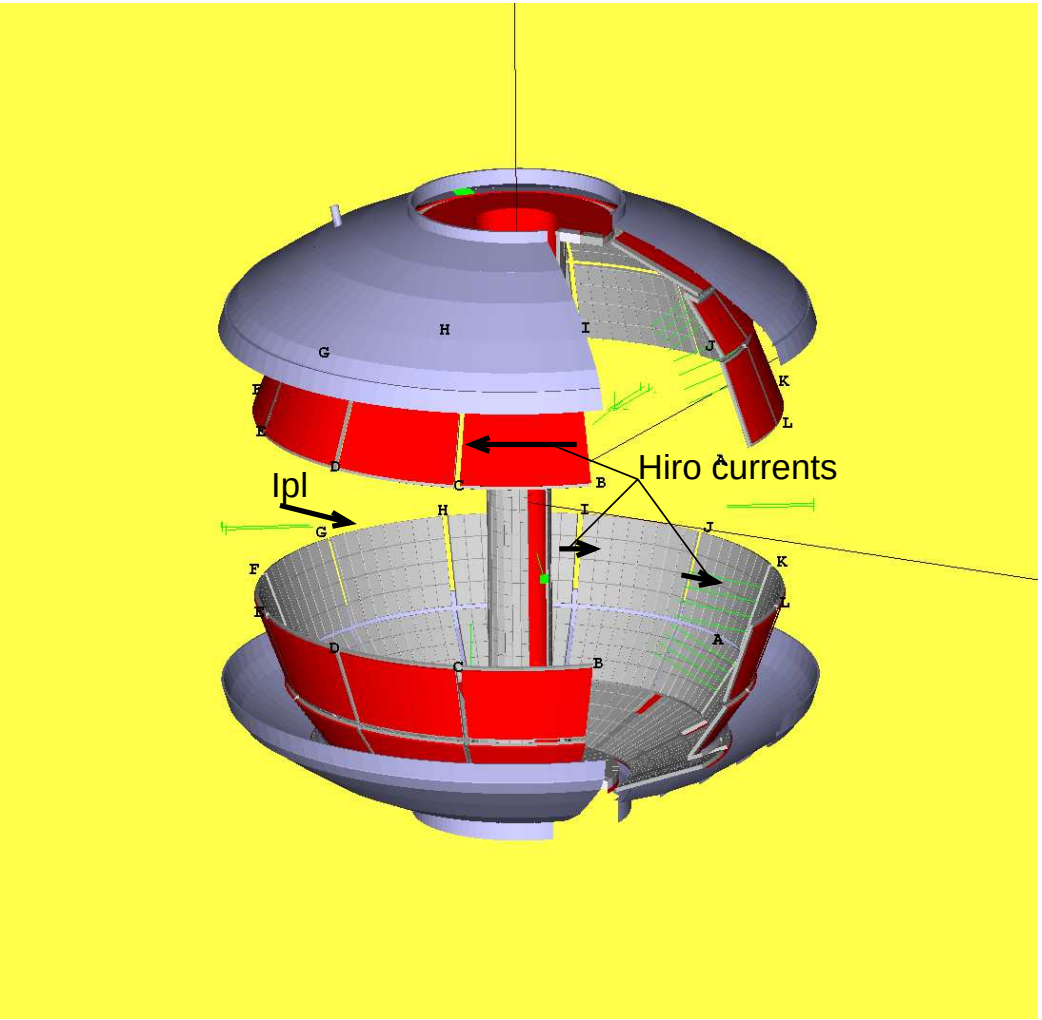

Set of Mirnov probes between carbon tiles and behind

$$\mu_0 i^{plate} = B_\tau^{out} - B_\tau^{in} \quad (5.2)$$

"Going through" Hiro currents (opposite to I_{pl}) can be distinguished from both "loops" of eddy currents and from "halo" currents (with same direction as I_{pl})

6 Summary.

Big progress has been made during 1.5 year in understanding disruptions.

The 46 years old puzzle on negative voltage spike and positive plasma current spike (K. A. Razumova, E. P. Gorbunov, Atomnaya Energia, v.15, p.363, 1963) has been finally resolved.

Hiro currents, introduced by the theory of Wall Touching Kink Mode (WTKM), represent a new fundamental effect, missed so far in MHD.

The driving EMF for Hiro currents is now revealed.

JET disruption data overwhelmingly (with no single exception) confirm consistency of Hiro currents with the toroidal asymmetry in the plasma current measurements during VDEs.